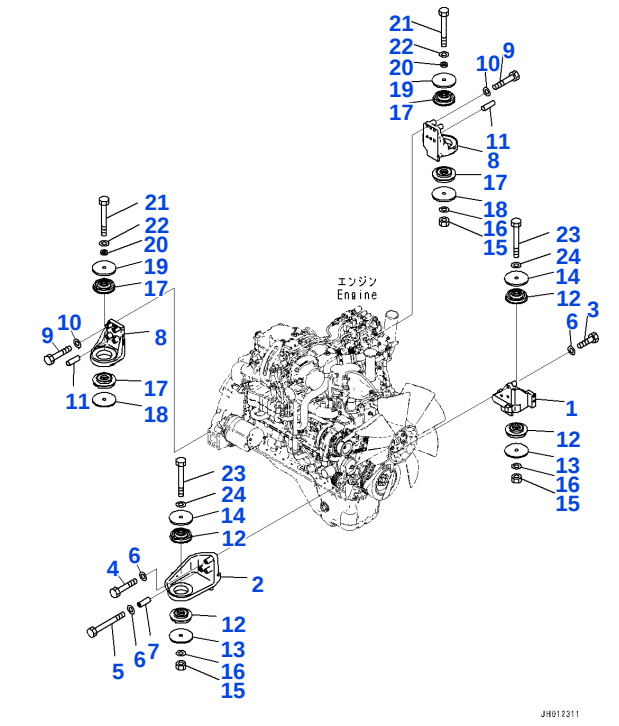

Reference: B0100-001001

B001001 Engine installation, (#95001-)

Item	Part No.	Part Name	Qty	Options
1	2A5-01-11880	BRACKET	1	SN: 95001-UP
2	2A6-01-11121	BRACKET	1	SN: 95001-UP
3	2A5-01-11230	BOLT	3	SN: 95001-UP
4	2A6-01-11130	BOLT	2	SN: 95001-UP
5	2A6-01-11650	BOLT	1	SN: 95001-UP
6	01643-31232	WASHER	6	SN: 95001-UP
7	2A6-01-11680	SPACER	1	SN: 95001-UP
8	2A5-01-11910	BRACKET	2	SN: 95001-UP
9	2A5-01-11230	BOLT	8	SN: 95001-UP
10	01643-31232	WASHER	8	SN: 95001-UP
11	04020-01228	PIN, DOWEL	4	SN: 95001-UP
12	2A5-01-11320	CUSHION	4	SN: 95001-UP
13	2A5-01-11261	PLATE	2	SN: 95001-UP
14	2A5-01-11271	PLATE	2	SN: 95001-UP
15	01580-11613	NUT	3	SN: 95001-UP
16	01643-31645	WASHER	3	SN: 95001-UP
17	2A6-01-11710	CUSHION	4	SN: 95001-UP
18	2A5-01-11261	PLATE	2	SN: 95001-UP
19	2A5-01-11271	PLATE	2	SN: 95001-UP
20	2A5-01-11590	PLATE	2	SN: 95001-UP
21	01011-81655	BOLT	2	SN: 95001-UP
22	01643-31645	WASHER	2	SN: 95001-UP
23	20Y-01-12270	BOLT	2	SN: 95001-UP
24	01643-31645	WASHER	2	SN: 95001-UP

Reference: B0100-001001

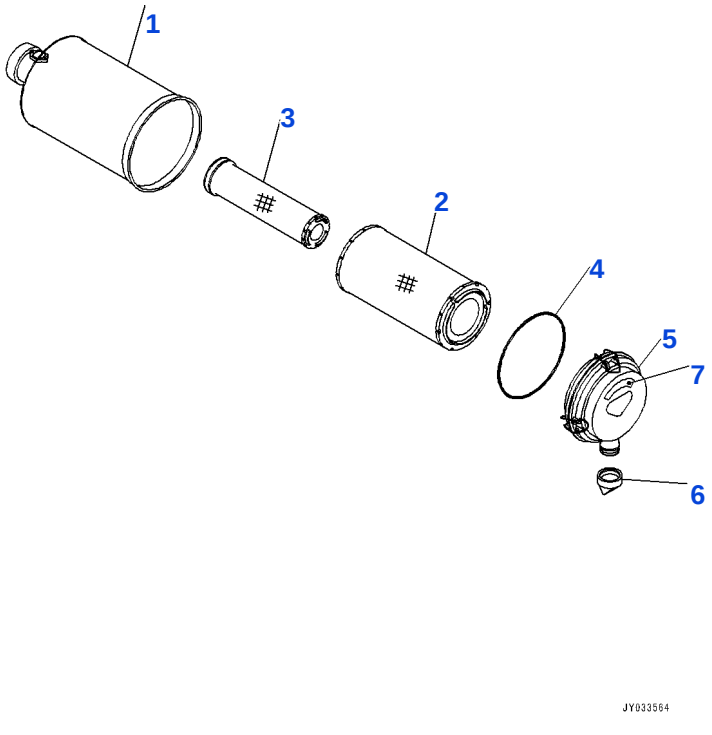

Reference: B0200-001001

B002001 Air cleaner, air cleaner components (#95001-)

Item	Part No.	Part Name	Qty	Options
1	6755-81-7200	AIR CLEANER ASSEMBLY	1	SN: 95001-UP
	600-185-4100	• ELEMENT ASSEMBLY	1	SN: 95001-UP
2	600-185-4110	• • ELEMENT, OUTER	1	SN: 95001-UP
3		• • ELEMENT, INNER	1	SN: 95001-UP
4	600-184-1470	• • O-RING	1	SN: 95001-UP
5	600-184-1420	• COVER	1	SN: 95001-UP
6	600-184-1350	• VALVE, VACUATOR	1	SN: 95001-UP
7	600-181-1930	• PLATE, AIR CLEANER CLEANING COUNT SEAL	1	SN: 95001-UP
		[C1]-PARTS WITH THIS SYMBOL CANNOT BE SUPPLIED INDIVIDUALLY. THEY ARE SUPPLIED AS ASSEMBLIES.		SN: UP

Reference: B0200-001001

Open this exact parts catalogue on K-Part

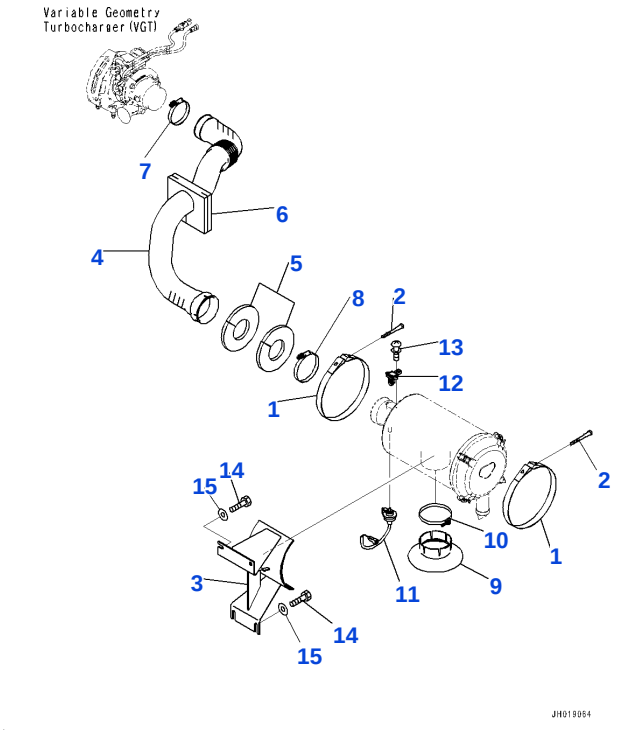

Reference: B0200-001002

B002002 Air cleaner, air cleaner installation (#95001-)

Item	Part No.	Part Name	Qty	Options
1	6222-81-7190	BAND	2	SN: 95001-UP
2	6643-11-4641	BOLT	2	SN: 95001-UP
3	2A6-01-21110	BRACKET	1	SN: 95001-UP
4	2A6-01-11111	HOSE	1	SN: 95001-UP
5	2A6-01-11730	SEAT	2	SN: 95001-UP
6	2A6-54-12771	SEAT	1	SN: 95001-UP
7	07299-00105	CLAMP	1	SN: 95001-UP
8	07299-00130	CLAMP	1	SN: 95001-UP
	22U-01-27200	HOOD ASSEMBLY	1	SN: 95001-UP
9		• HOOD	1	SN: 95001-UP
10	600-714-1260	• CLAMP	1	SN: 95001-UP
11	7861-93-1430	SENSOR, DUST INDICATOR	1	SN: 95001-UP
12	6252-81-7800	SENSOR AIRFLOW	1	SN: 95001-UP
	6252-81-7900	SENSOR AIRFLOW	1	SN: 95001-95812
	6252-81-7910	• O-RING	1	SN: 95001-UP
13	01023-10412	SCREW	2	SN: 95001-UP
14	01010-81225	BOLT	4	SN: 95001-UP
15	175-54-34170	WASHER	4	SN: 95001-UP
		[B1]-INDICATES PART WITH DISCONTINUED SUPPLY. THE PART SHOWN IN THE LINE ABOVE IS SUPPLIED INSTEAD OF THIS PART.		SN: UP
		[C1]-PARTS WITH THIS SYMBOL CANNOT BE SUPPLIED INDIVIDUALLY. THEY ARE SUPPLIED AS ASSEMBLIES.		SN: UP

Reference: B0200-001002

Open this exact parts catalogue on K-Part

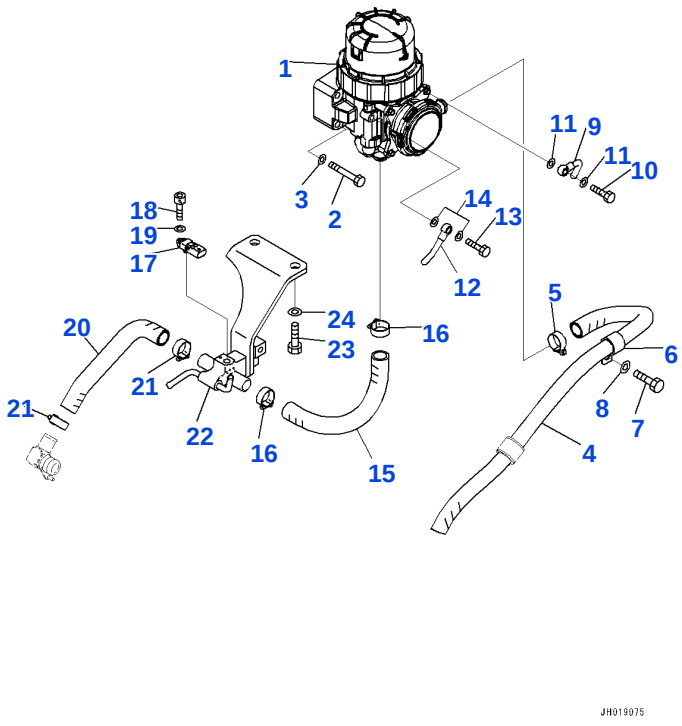

Reference: B0200-001003

B002003 Air cleaner, Komatsu Closed Crankcase Ventilation (KCCV) (#95001-)

Item	Part No.	Part Name	Qty	Options
1	600-332-2211	VENTILATOR	1	SN: 95001-UP
	600-331-2900	• ELEMENT KIT	1	SN: 95001-UP
2	01010-81070	BOLT	4	SN: 95001-UP
3	01643-31032	WASHER	4	SN: 95001-UP
4	22U-01-41250	HOSE	1	SN: 95001-UP
5	07281-00419	CLAMP, HOSE	1	SN: 95828-UP
	07281-00359	CLAMP, HOSE	1	SN: 95001-95827
6	2A5-01-11210	CLIP	1	SN: 95001-UP
7	01010-81230	BOLT	1	SN: 95001-UP
8	01643-31232	WASHER	1	SN: 95001-UP
9	6746-21-7460	JOINT	1	SN: 95001-UP
10	07206-30812	BOLT, JOINT	1	SN: 95001-UP
11	07005-01212	SEAL, WASHER	2	SN: 95001-UP
12	6755-21-7240	JOINT	1	SN: 95001-UP
13	07206-30812	BOLT, JOINT	1	SN: 95001-UP
14	07005-01212	SEAL, WASHER	2	SN: 95001-UP
15	6755-21-7290	HOSE	1	SN: 95001-UP
16	07281-00359	CLAMP, HOSE	2	SN: 95001-UP
17	6252-11-2901	SENSOR, PRESSURE, CRANKCASE	1	SN: 95280-UP
	6252-11-2900	SENSOR, PRESSURE, CRANKCASE	1	SN: 95001-95279
	6252-11-2800	• O-RING	1	SN: 95001-UP
18	600-331-1930	BOLT	1	SN: 95001-UP
19	01640-20508	WASHER	1	SN: 95001-UP
20	6755-21-7310	HOSE	1	SN: 95001-UP
21	07281-00359	CLAMP, HOSE	2	SN: 95001-UP
22	2A6-01-11391	BRACKET	1	SN: 95001-UP
23	01010-81230	BOLT	2	SN: 95001-UP
24	01643-31232	WASHER	2	SN: 95001-UP
		[A1]-PARTS WITH THIS SYMBOL AND THE PARTS LISTED IN THE ROW DIRECTLY ABOVE CAN BE USED INTERCHANGEABLY.		SN: UP

Open this exact parts catalogue on K-Part

Item	Part No.	Part Name	Qty	Options
		[A2]-INSTEAD OF PARTS WITH THIS SYMBOL, THE PARTS LISTED IN THE ROW ABOVE CAN BE USED.		SN: UP

Reference: B0200-001003

Open this exact parts catalogue on K-Part

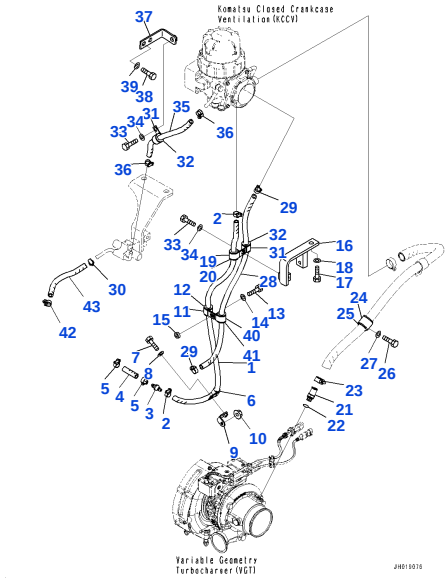

Reference: B0200-001004

B002004 Air cleaner, Komatsu Closed Crankcase Ventilation (KCCV) piping (#95001-)

Item	Part No.	Part Name	Qty	Options
1	2A6-01-11511	HOSE	1	SN: 95001-UP
2	11Y-09-11140	CLIP	2	SN: 95861-UP
	07281-00197	CLAMP	2	SN: 95001-95860
3	6261-51-2810	VALVE, CHECK	1	SN: 95001-UP
4	07260-20906	HOSE	1	SN: 95001-UP
5	11Y-09-11140	CLIP	2	SN: 95861-UP
	07281-00197	CLAMP	2	SN: 95001-95860
6	04434-51608	CLIP	1	SN: 95001-UP
7	01010-80825	BOLT	1	SN: 95001-UP
8	01643-30823	WASHER	1	SN: 95001-UP
9	6755-21-7150	BRACKET	1	SN: 95001-UP
10	01584-00806	NUT	1	SN: 95001-UP
11	04434-52310	CLIP	1	SN: 95001-UP
12	2A5-01-11580	CUSHION	1	SN: 95001-UP
13	01010-80825	BOLT	1	SN: 95001-UP
14	01643-30823	WASHER	1	SN: 95001-UP
15	22N-957-1420	COLLAR	1	SN: 95001-UP
16	2A6-01-11551	BRACKET	1	SN: 95001-UP
17	01010-81230	BOLT	1	SN: 95001-UP
18	01643-31232	WASHER	1	SN: 95001-UP
19	04434-52312	CLIP	1	SN: 95001-UP
20	2A5-01-11580	CUSHION	1	SN: 95001-UP
21	6755-21-7121	JOINT	1	SN: 95001-UP
22	6755-21-7110	O-RING	1	SN: 95001-UP
23	07281-00289	CLAMP	1	SN: 95001-UP
24	04434-53412	CLIP	1	SN: 95001-UP
25	07095-40627	CUSHION	1	SN: 95001-UP
26	01010-81230	BOLT	1	SN: 95001-UP
27	01643-31232	WASHER	1	SN: 95001-UP
28	2A6-01-11850	HOSE	1	SN: 95596-UP
	2A6-01-11521	HOSE	1	SN: 95001-95595
29	11Y-09-11140	CLIP	2	SN: 95861-UP
	07281-00197	CLAMP	2	SN: 95001-95860
30	11Y-09-11140	CLIP	1	SN: 95861-UP
	07281-00197	CLAMP	1	SN: 95001-95860
31	04434-52312	CLIP	2	SN: 95001-UP
32	2A5-01-11580	CUSHION	2	SN: 95001-UP
33	01010-81230	BOLT	2	SN: 95001-UP
34	01643-31232	WASHER	2	SN: 95001-UP
35	2A6-01-11860	HOSE	1	SN: 95596-UP
	6755-21-7430	HOSE	1	SN: 95001-95595
36	11Y-09-11140	CLIP	2	SN: 95861-UP
	07281-00197	CLAMP	2	SN: 95001-95860
37	2A6-01-11561	BRACKET	1	SN: 95001-UP
38	01010-81230	BOLT	2	SN: 95001-UP
39	01643-31232	WASHER	2	SN: 95001-UP

Item	Part No.	Part Name	Qty	Options
40	04434-52310	CLIP	1	SN: 95001-UP
41	2A5-01-11580	CUSHION	1	SN: 95001-UP
42	11Y-09-11140	CLIP	1	SN: 95861-UP
	07281-00197	CLAMP	1	SN: 95001-95860
43	6252-21-7720	HOSE	1	SN: 95001-UP
		[A1]-PARTS WITH THIS SYMBOL AND THE PARTS LISTED IN THE ROW DIRECTLY ABOVE CAN BE USED INTERCHANGEABLY.		SN: UP
		[A2]-INSTEAD OF PARTS WITH THIS SYMBOL, THE PARTS LISTED IN THE ROW ABOVE CAN BE USED.		SN: UP

Reference: B0200-001004

Open this exact parts catalogue on K-Part

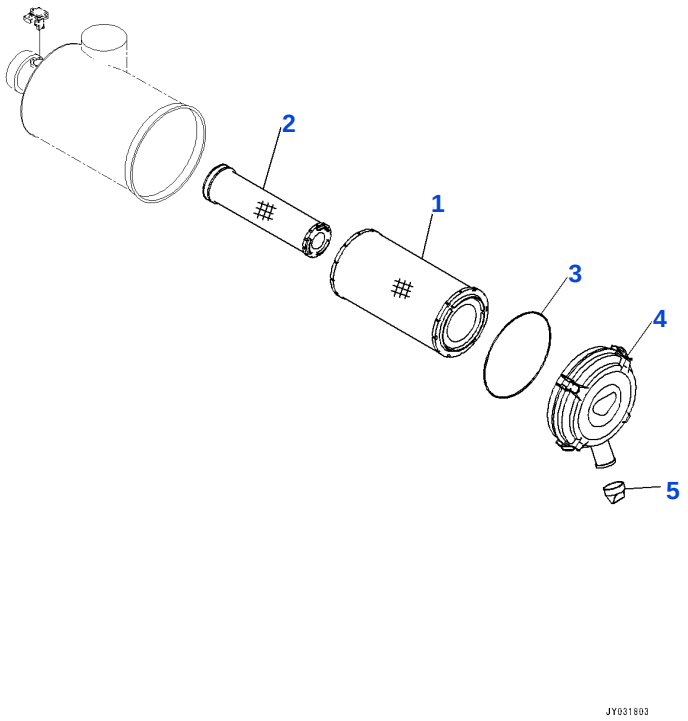

Reference: B0200-002001

B003001 AIR CLEANER, AIR CLEANER COMPONENT PARTS (WITH PRE CLEANER)(#95001-)

Item	Part No.	Part Name	Qty	Options
	6755-81-7400	AIR CLEANER ASSEMBLY	1	SN: 95001-UP
	600-185-4100	• ELEMENT ASSEMBLY	1	SN: 95001-UP
1	600-185-4110	• • ELEMENT, OUTER	1	SN: 95001-UP
2		• • ELEMENT, INNER	1	SN: 95001-UP
3	600-184-1470	• • O-RING	1	SN: 95001-UP
4	600-184-1420	• COVER	1	SN: 95001-UP
5	600-184-1350	• VALVE, VACUATOR	1	SN: 95001-UP
		[C1]-PARTS WITH THIS SYMBOL CANNOT BE SUPPLIED INDIVIDUALLY. THEY ARE SUPPLIED AS ASSEMBLIES.		SN: UP

Reference: B0200-002001

Open this exact parts catalogue on K-Part

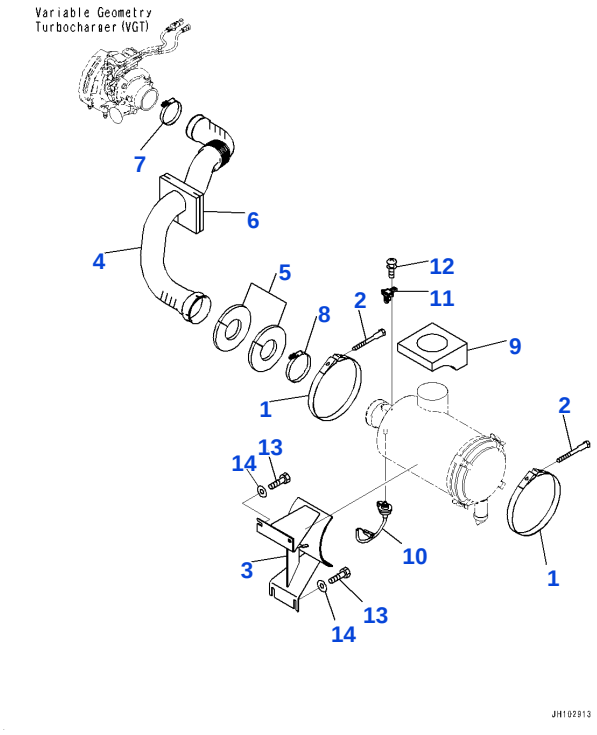

Reference: B0200-002002

B003002 AIR CLEANER, AIR CLEANER INSTALLATION (WITH PRE-CLEANER) (#95001-)

Item	Part No.	Part Name	Qty	Options
1	6222-81-7190	BAND	2	SN: 95001-UP
2	6643-11-4641	BOLT	2	SN: 95001-UP
3	2A6-01-21110	BRACKET	1	SN: 95001-UP
4	2A6-01-11111	HOSE	1	SN: 95001-UP
5	2A6-01-11730	SEAT	2	SN: 95001-UP
6	2A6-54-12771	SEAT	1	SN: 95001-UP
7	07299-00105	CLAMP	1	SN: 95001-UP
8	07299-00130	CLAMP	1	SN: 95001-UP
9	2A6-01-11840	SEAL	1	SN: 95001-UP
10	7861-93-1430	SENSOR, DUST INDICATOR	1	SN: 95001-UP
11	6252-81-7800	SENSOR AIRFLOW	1	SN: 95001-UP
	6252-81-7900	SENSOR AIRFLOW	1	SN: 95001-95812
12	01023-10412	SCREW	2	SN: 95001-UP
13	01010-81225	BOLT	4	SN: 95001-UP
14	175-54-34170	WASHER	4	SN: 95001-UP
		[B1]-INDICATES PART WITH DISCONTINUED SUPPLY. THE PART SHOWN IN THE LINE ABOVE IS SUPPLIED INSTEAD OF THIS PART.		SN: UP

Reference: B0200-002002

Open this exact parts catalogue on K-Part

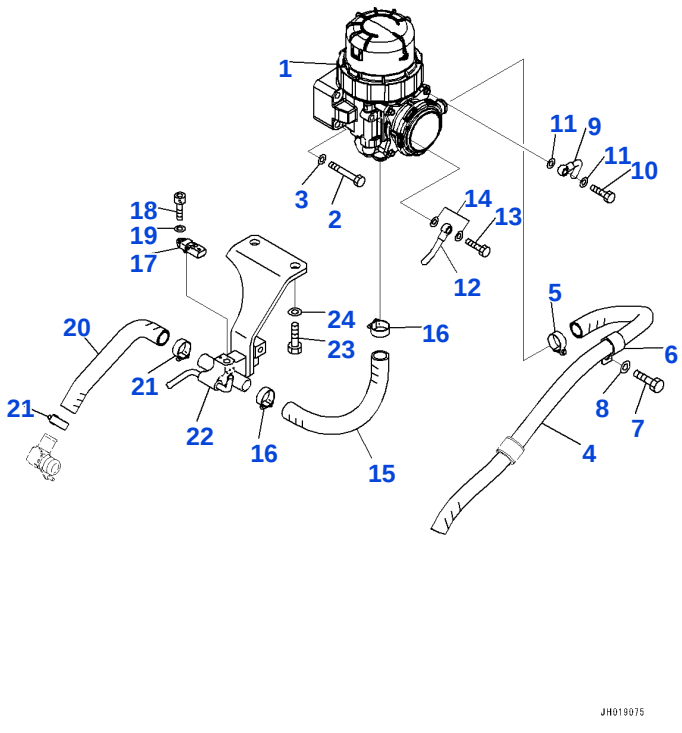

Reference: B0200-002003

B003003 AIR CLEANER, KOMATSU CLOSED CRANKCASE VENTILATION (KCCV) (PRECLEANER EQUIPPED)(#95001-)

Item	Part No.	Part Name	Qty	Options
1	600-332-2211	VENTILATOR	1	SN: 95001-UP
	600-331-2900	• ELEMENT KIT	1	SN: 95001-UP
2	01010-81070	BOLT	4	SN: 95001-UP
3	01643-31032	WASHER	4	SN: 95001-UP
4	22U-01-41250	HOSE	1	SN: 95001-UP
5	07281-00419	CLAMP, HOSE	1	SN: 95828-UP
	07281-00359	CLAMP, HOSE	1	SN: 95001-95827
6	2A5-01-11210	CLIP	1	SN: 95001-UP
7	01010-81230	BOLT	1	SN: 95001-UP
8	01643-31232	WASHER	1	SN: 95001-UP
9	6746-21-7460	JOINT	1	SN: 95001-UP
10	07206-30812	BOLT, JOINT	1	SN: 95001-UP
11	07005-01212	SEAL, WASHER	2	SN: 95001-UP
12	6755-21-7240	JOINT	1	SN: 95001-UP
13	07206-30812	BOLT, JOINT	1	SN: 95001-UP
14	07005-01212	SEAL, WASHER	2	SN: 95001-UP
15	6755-21-7290	HOSE	1	SN: 95001-UP
16	07281-00359	CLAMP, HOSE	2	SN: 95001-UP
17	6252-11-2901	SENSOR, PRESSURE, CRANKCASE	1	SN: 95001-UP
	6252-11-2800	• O-RING	1	SN: 95001-UP
18	600-331-1930	BOLT	1	SN: 95001-UP
19	01640-20508	WASHER	1	SN: 95001-UP
20	6755-21-7310	HOSE	1	SN: 95001-UP
21	07281-00359	CLAMP, HOSE	2	SN: 95001-UP
22	2A6-01-11391	BRACKET	1	SN: 95001-UP
23	01010-81230	BOLT	2	SN: 95001-UP
24	01643-31232	WASHER	2	SN: 95001-UP
		[A2]-INSTEAD OF PARTS WITH THIS SYMBOL, THE PARTS LISTED IN THE ROW ABOVE CAN BE USED.		SN: UP

Reference: B0200-002003

Open this exact parts catalogue on K-Part

Get the complete PDF catalogue

Komatsu PC230LC-11 (JPN) S/N 95001-96999 (Japanese)

$89

with PayPal | Store cart: $99

Buy this PDF on Manuals Komatsu

Check the model, serial range and language before payment.

Download instructions are emailed after payment confirmation.

This free sample contains 10 catalogue pages.