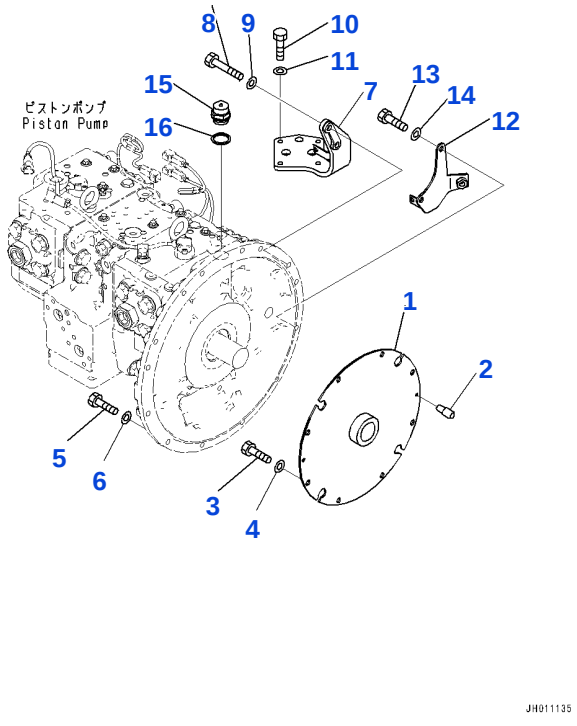

Reference: B0000-001001

B001001 Engine related parts, damper (#1001-)

Item	Part No.	Part Name	Qty	Options
1	22U-01-21310	DUMPER	1	SN: 1001-UP
2	203-01-51120	PIN	2	SN: 1001-UP
3	01010-81020	BOLT	8	SN: 1001-UP
4	01643-31032	WASHER	8	SN: 1001-UP
5	01010-81050	BOLT	10	SN: 1001-UP
6	01643-31032	WASHER	10	SN: 1001-UP
7	22U-04-41121	BRACKET	1	SN: 1001-UP
8	01010-81065	BOLT	2	SN: 1001-UP
9	01643-31032	WASHER	2	SN: 1001-UP
10	01010-80825	BOLT	4	SN: 1001-UP
11	01643-30823	WASHER	4	SN: 1001-UP
12	22U-01-41191	BRACKET	1	SN: 1001-UP
13	01010-81050	BOLT	2	SN: 1001-UP
14	01643-31032	WASHER	2	SN: 1001-UP
15	22U-62-53960	BREEZER	1	SN: 3487-UP
	232-23-11220	BREEZER	1	SN: 1001-3486
16	07005-03016	SEAL, WASHER	1	SN: 1001-UP
		[A2]-IN PLACE OF THE PARTS WITH THIS SYMBOL, YOU CAN USE THE PARTS LISTED ON THE LINE ABOVE IT.		SN: UP

Reference: B0000-001001

Open this exact parts catalogue on K-Part

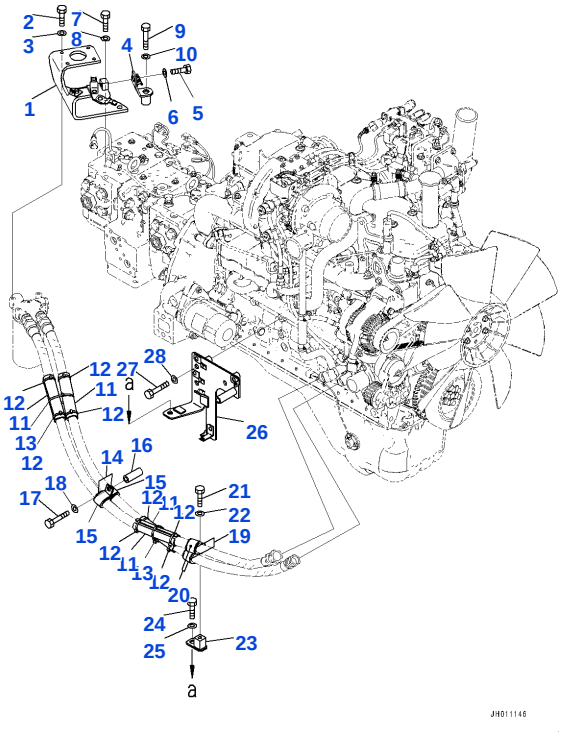

Reference: B0000-001002

B001002 Engine related parts, filter remote related parts (#1001-1178)

Item	Part No.	Part Name	Qty	Options
1	22U-62-41712	BRACKET	1	SN: 1001-1178
2	01010-80825	BOLT	4	SN: 1001-@
3	01643-30823	WASHER	4	SN: 1001-@
4	22U-01-41310	BRACKET	1	SN: 1001-@
5	01010-81225	BOLT	1	SN: 1001-@
6	01643-31232	WASHER	1	SN: 1001-@
7	01010-81235	BOLT	1	SN: 1001-@
8	01643-31232	WASHER	1	SN: 1001-@
9	01010-81275	BOLT	1	SN: 1001-@
10	01643-31232	WASHER	1	SN: 1001-@
11	20Y-01-41250	COVER	4	SN: 1001-@
12	08034-20536	BAND	8	SN: 1001-@
13	08034-20536	BAND	2	SN: 1001-@
14	07095-40627	CUSHION	2	SN: 1001-@
15	04434-53412	CLIP	2	SN: 1001-@
16	175-61-17240	COLOR	1	SN: 1001-@
17	01010-81295	BOLT	1	SN: 1001-@
18	01643-31232	WASHER	1	SN: 1001-@
19	07095-40627	CUSHION	2	SN: 1001-@
20	04434-53412	CLIP	2	SN: 1001-@
21	01010-81230	BOLT	1	SN: 1001-@
22	01643-31232	WASHER	1	SN: 1001-@
23	22U-06-41410	BRACKET	1	SN: 1001-@
24	01010-81240	BOLT	1	SN: 1001-@
25	01643-31232	WASHER	1	SN: 1001-@
26	22U-06-41171	BRACKET	1	SN: 1001-@
27	01010-81280	BOLT	3	SN: 1001-@
28	01643-31232	WASHER	3	SN: 1001-@

Reference: B0000-001002

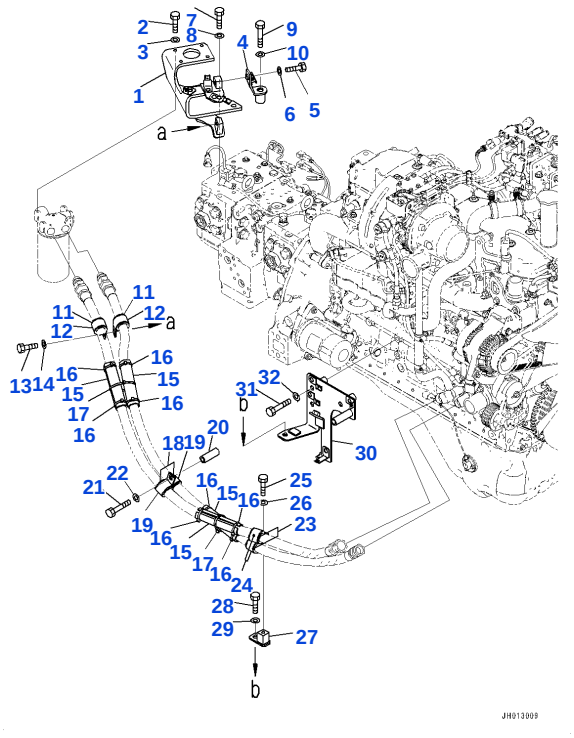

Reference: B0000-001002A

B001003 Engine related parts, filter remote related parts (#1179-)

Item	Part No.	Part Name	Qty	Options
1	22U-62-41713	BRACKET	1	SN: 1179-UP
2	01010-80825	BOLT	4	SN: 1001-UP
3	01643-30823	WASHER	4	SN: 1001-UP
4	22U-01-41310	BRACKET	1	SN: 1001-UP
5	01010-81225	BOLT	1	SN: 1001-UP
6	01643-31232	WASHER	1	SN: 1001-UP
7	01010-81235	BOLT	1	SN: 1001-UP
8	01643-31232	WASHER	1	SN: 1001-UP
9	01010-81275	BOLT	1	SN: 1001-UP
10	01643-31232	WASHER	1	SN: 1001-UP
11	07095-40627	CUSHION	2	SN: 1179-UP
12	04434-53412	CLIP	2	SN: 1179-UP
13	01010-81230	BOLT	1	SN: 1179-UP
14	01643-31232	WASHER	1	SN: 1179-UP
15	20Y-01-41250	COVER	4	SN: 1001-UP
16	08034-20536	BAND	8	SN: 1001-UP
17	08034-20536	BAND	2	SN: 1001-UP
18	07095-40627	CUSHION	2	SN: 1001-UP
19	04434-53412	CLIP	2	SN: 1001-UP
20	175-61-17240	COLOR	1	SN: 1001-UP
21	01010-81295	BOLT	1	SN: 1001-UP
22	01643-31232	WASHER	1	SN: 1001-UP
23	07095-40627	CUSHION	2	SN: 1001-UP
24	04434-53412	CLIP	2	SN: 1001-UP
25	01010-81230	BOLT	1	SN: 1001-UP
26	01643-31232	WASHER	1	SN: 1001-UP
27	22U-06-41410	BRACKET	1	SN: 1001-UP
28	01010-81240	BOLT	1	SN: 1001-UP
29	01643-31232	WASHER	1	SN: 1001-UP
30	22U-06-41171	BRACKET	1	SN: 1001-UP
31	01010-81280	BOLT	3	SN: 1001-UP
32	01643-31232	WASHER	3	SN: 1001-UP

Open this exact parts catalogue on K-Part

Open this exact parts catalogue on K-Part

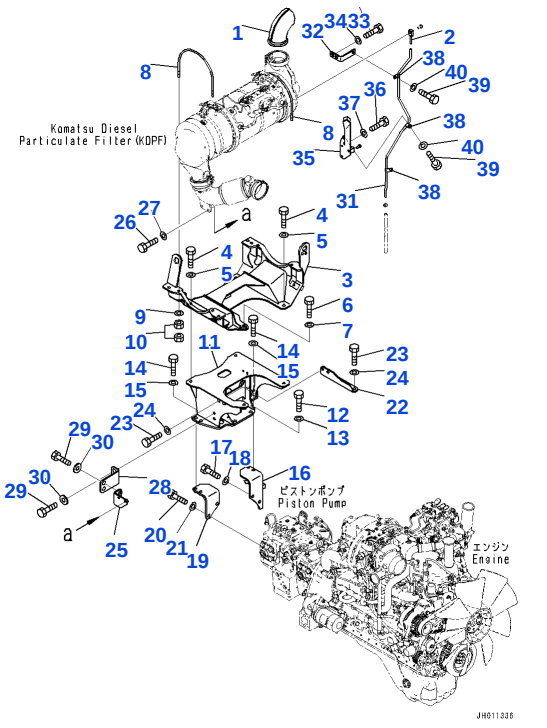

Reference: B0000-001003

B001004 Engine related parts, Komatsu Diesel Particulate Filter (KDPF) related parts (#1001-)

Item	Part No.	Part Name	Qty	Options
1	6755-11-5170	PIPE	1	SN: 1001-UP
2	2A5-01-11720	JOINT	1	SN: 1001-UP
3	2A5-01-11374	BRACKET	1	SN: 2234-UP
	2A5-01-11373	BRACKET	1	SN: 1001-2233
4	01010-81230	BOLT	3	SN: 1001-UP
5	01643-31232	WASHER	3	SN: 1001-UP
6	01010-81250	BOLT	1	SN: 1001-UP
7	01643-31232	WASHER	1	SN: 1001-UP
8	2A5-01-11412	BOLT	2	SN: 1001-UP
9	2A5-01-11421	WASHER	4	SN: 1001-UP
10	01581-01008	NAT	8	SN: 1001-UP
11	2A5-01-11382	BRACKET	1	SN: 1001-UP
12	01010-81240	BOLT	4	SN: 1001-UP
13	01643-31232	WASHER	4	SN: 1001-UP
14	01010-81240	BOLT	4	SN: 1001-UP
15	01643-31232	WASHER	4	SN: 1001-UP
16	22U-01-41160	BRACKET	1	SN: 1001-UP
17	01010-81240	BOLT	2	SN: 1001-UP
18	01643-31232	WASHER	2	SN: 1001-UP
19	2A5-01-11490	BRACKET	1	SN: 1001-UP
20	01010-81240	BOLT	2	SN: 1001-UP
21	01643-31232	WASHER	2	SN: 1001-UP
22	2A5-01-11531	BRACKET	1	SN: 1001-UP
23	01010-81230	BOLT	3	SN: 1001-UP
24	01643-31232	WASHER	3	SN: 1001-UP
25	2A5-01-11521	BRACKET	1	SN: 1001-UP
26	01010-81030	BOLT	2	SN: 1001-UP
27	01643-31032	WASHER	2	SN: 1001-UP
28	2A5-01-11510	BRACKET	1	SN: 1001-UP
29	01010-81230	BOLT	4	SN: 1001-UP
30	175-54-34170	WASHER	4	SN: 1001-UP
31	22U-01-41171	TUBE	1	SN: 1001-UP
32	22U-01-41180	BRACKET	1	SN: 1001-UP

Item	Part No.	Part Name	Qty	Options
33	01010-81225	BOLT	2	SN: 1001-UP
34	01643-31232	WASHER	2	SN: 1001-UP
35	22U-04-41211	BRACKET	1	SN: 1001-UP
36	01010-80825	BOLT	2	SN: 1001-UP
37	01643-30823	WASHER	2	SN: 1001-UP
38	2A5-01-11750	CLIP	3	SN: 1001-UP
39	01010-81225	BOLT	3	SN: 1001-UP
40	01643-31232	WASHER	3	SN: 1001-UP

Reference: B0000-001003

Open this exact parts catalogue on K-Part

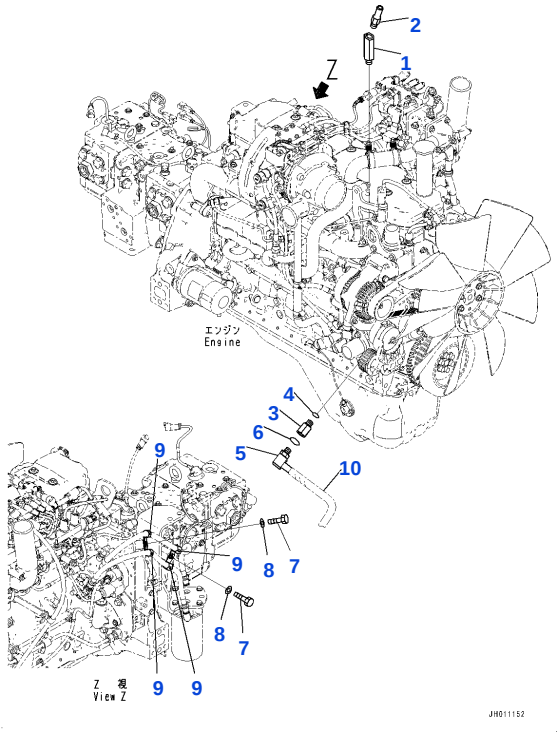

Reference: B0000-001004

B001005 Engine related parts, elbow (#1001-)

Item	Part No.	Part Name	Qty	Options
1	2A5-977-1122	ERBO	1	SN: 1001-UP
2	205-979-4310	JOINT	1	SN: 1001-UP
3	22U-01-41280	ADAPTER	1	SN: 1001-UP
4	6251-51-9890	O-RING	1	SN: 1001-UP
5	22U-01-41290	ERBO	1	SN: 1001-UP
6	07002-11423	O-RING	1	SN: 1001-UP
7	01010-81230	BOLT	2	SN: 1001-UP
8	01643-31232	WASHER	2	SN: 1001-UP
9	04434-51512	CLIP	4	SN: 1001-UP
10	22U-979-4142	HOSE (CAB, FLOOR, HEATER PIPING)	-1	SN: UP
	22U-979-4142	HOSE (CAB, FLOOR, HEATER PIPING)	-1	SN: UP
	22U-979-4142	HOSE (CAB, FLOOR, HEATER PIPING)	-1	SN: UP
	22U-979-4142	HOSE (CAB, FLOOR, HEATER PIPING)	-1	SN: UP
	22U-979-4142	HOSE (CAB, FLOOR, HEATER PIPING)	-1	SN: UP
	22U-979-4142	HOSE (CAB, FLOOR, HEATER PIPING)	-1	SN: UP
	22U-979-4142	HOSE (CAB, FLOOR, HEATER PIPING)	-1	SN: UP

Reference: B0000-001004

Open this exact parts catalogue on K-Part

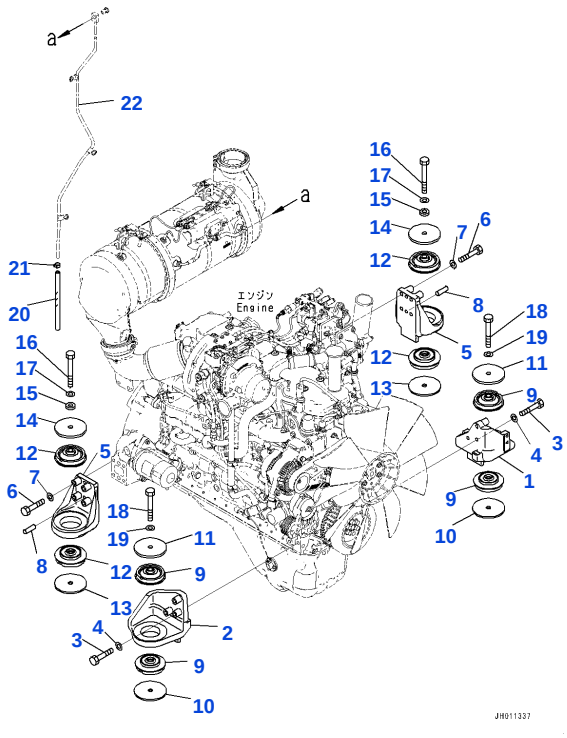

Reference: B0100-001001

B002001 Engine installation, related parts (#1001-)

Item	Part No.	Part Name	Qty	Options
1	22U-01-41141	BRACKET	1	SN: 1001-UP
2	2A5-01-11890	BRACKET	1	SN: 1001-UP
3	2A5-01-11230	BOLT	6	SN: 1001-UP
4	01643-31232	WASHER	6	SN: 1001-UP
5	2A5-01-11910	BRACKET	2	SN: 1001-UP
6	2A5-01-11230	BOLT	8	SN: 1001-UP
7	01643-31232	WASHER	8	SN: 1001-UP
8	04020-01228	PIN, DOWEL	4	SN: 1001-UP
9	2A5-01-11320	CUSHION	4	SN: 1001-UP
10	2A5-01-11261	PLATE	2	SN: 1001-UP
11	2A5-01-11271	PLATE	2	SN: 1001-UP
12	2A5-01-11330	CUSHION	4	SN: 1001-UP
13	2A5-01-11261	PLATE	2	SN: 1001-UP
14	2A5-01-11271	PLATE	2	SN: 1001-UP
15	2A5-01-11590	PLATE	2	SN: 1001-UP
16	01011-81635	BOLT	2	SN: 1001-UP
17	01643-31645	WASHER	2	SN: 1001-UP
18	01011-81620	BOLT	2	SN: 1001-UP
19	01643-31645	WASHER	2	SN: 1001-UP
20	2A5-01-11551	HOSE	1	SN: 1001-UP
21	07285-00150	CLIP	1	SN: 1001-UP
22	22U-01-41171	TUBE (ENGINE RELATED PARTS, KOMATSU DIESEL PARTICULATE FILTER (KDPF) RELATED PARTS)	-1	SN: UP

Reference: B0100-001001

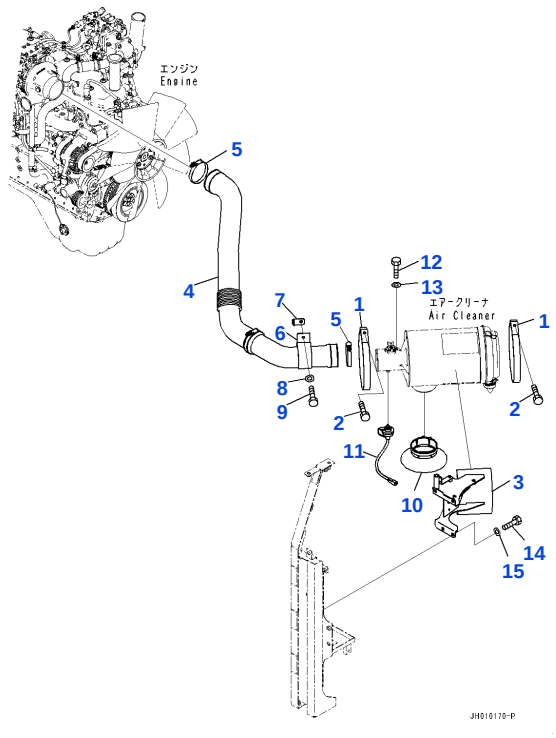

Reference: B0200-001001

B003001 Intake connector, (1/3)(#1001-)

Item	Part No.	Part Name	Qty	Options
1	6131-11-4520	BAND	2	SN: 1001-UP
2	6643-11-4641	BOLT	2	SN: 1001-UP
3	22U-01-41111	BRACKET	1	SN: 1001-UP
4	22U-01-41121	HOSE	1	SN: 1001-UP
5	07299-00105	CLAMP	2	SN: 1001-UP
6	22U-01-41260	CLIP	1	SN: 1001-UP
7	22U-01-41270	BRACKET	1	SN: 1001-UP
8	417-43-16210	WASHER	1	SN: 1001-UP
9	01016-51040	BOLT	1	SN: 1001-UP
10	2A5-01-11101	HOOD ASSEMBLY	1	SN: 1001-UP
11	7861-93-1430	SENSOR, DUST INDICATOR	1	SN: 1001-UP
12	01252-A0412	BOLT, WITH HEX SOCKET HOLE	2	SN: 1001-UP
13	01640-20408	WASHER	2	SN: 1001-UP
14	01010-81230	BOLT	4	SN: 1001-UP
15	01643-31232	WASHER	4	SN: 1001-UP

Reference: B0200-001001

Open this exact parts catalogue on K-Part

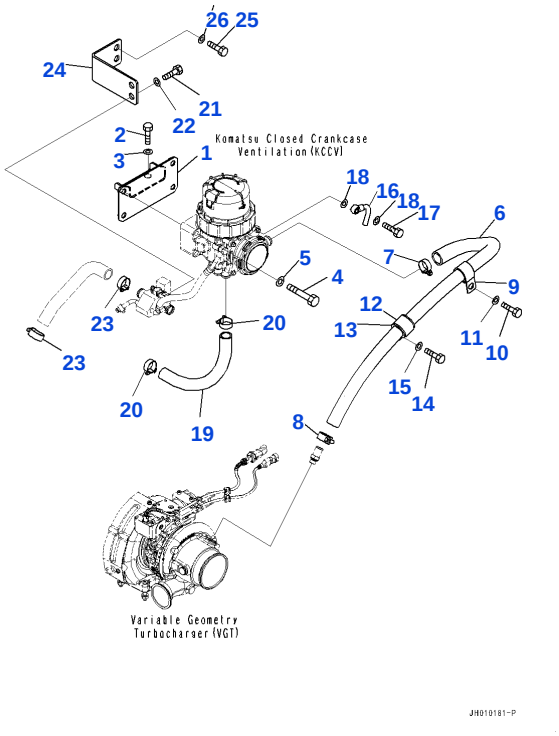

Reference: B0200-001002

B003002 Intake connector, (2/3)(#1001-)

Item	Part No.	Part Name	Qty	Options
1	22U-01-41131	BRACKET	1	SN: 1001-UP
2	01010-81230	BOLT	2	SN: 1001-UP
3	01643-31232	WASHER	2	SN: 1001-UP
4	01010-81070	BOLT	4	SN: 1001-UP
5	01643-31032	WASHER	4	SN: 1001-UP
6	22U-01-41250	HOSE	1	SN: 1001-UP
7	07281-00419	CLAMP, HOSE	1	SN: 3487-UP
	07281-00359	CLAMP, HOSE	1	SN: 1001-3486
8	07281-00289	CLAMP	1	SN: 1001-UP
9	2A5-01-11210	CLIP	1	SN: 1001-UP
10	01010-81230	BOLT	1	SN: 1001-UP
11	01643-31232	WASHER	1	SN: 1001-UP
12	04434-53412	CLIP	1	SN: 1001-UP
13	07095-40627	CUSHION	1	SN: 1001-UP
14	01010-81230	BOLT	1	SN: 1001-UP
15	01643-31232	WASHER	1	SN: 1001-UP
16	22U-01-41240	JOINT	1	SN: 1001-UP
17	07206-30812	BOLT, JOINT	1	SN: 1001-UP
18	07005-01212	SEAL, WASHER	2	SN: 1001-UP
19	2A5-01-11814	HOSE	1	SN: 1001-UP
20	07281-00359	CLAMP, HOSE	2	SN: 1001-UP
21	01010-81230	BOLT	2	SN: 1001-UP
22	01643-31232	WASHER	2	SN: 1001-UP
23	07281-00359	CLAMP, HOSE	2	SN: 1001-UP
24	22U-54-43190	BRACKET	1	SN: 1001-UP
25	01010-81230	BOLT	2	SN: 1001-UP
26	01643-31232	WASHER	2	SN: 1001-UP
		[A2]-IN PLACE OF THE PARTS WITH THIS SYMBOL, YOU CAN USE THE PARTS LISTED ON THE LINE ABOVE IT.		SN: UP

Reference: B0200-001002

Open this exact parts catalogue on K-Part

Get the complete PDF catalogue

Komatsu PC228US-10 (JPN) S/N 1001-UP (Japanese)

$89

with PayPal | Store cart: $99

Buy this PDF on Manuals Komatsu

Check the model, serial range and language before payment.

Download instructions are emailed after payment confirmation.

This free sample contains 10 catalogue pages.