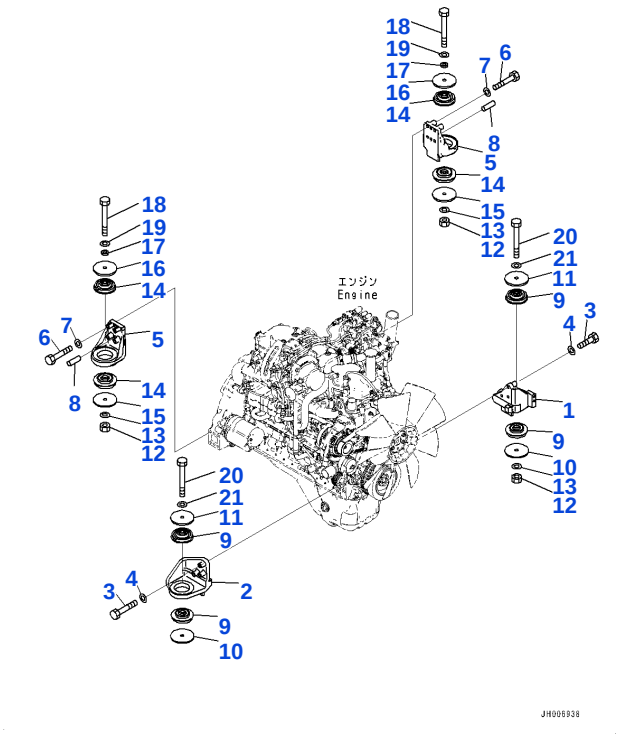

Reference: B0100-001001

B001001 ENGINE MOUNTING, RELATED PARTS (#450001-454228)

Item	Part No.	Part Name	Qty	Options
1	2A5-01-11880	BRACKET	1	SN: 450001-454228
2	2A5-01-11890	BRACKET	1	SN: 450001-454228
3	2A5-01-11230	BOLT	6	SN: 450001-454228
4	01643-31232	WASHER	6	SN: 450001-454228
5	2A5-01-11910	BRACKET	2	SN: 450001-454228
6	2A5-01-11230	BOLT	8	SN: 450001-454228
7	01643-31232	WASHER	8	SN: 450001-454228
8	04020-01228	PIN, DOWEL	4	SN: 450001-454228
9	2A5-01-11320	CUSHION	4	SN: 450001-454228
10	2A5-01-11261	PLATE	2	SN: 450001-454228
11	2A5-01-11271	PLATE	2	SN: 450001-454228
12	01580-11613	NAT	3	SN: 450001-454228
13	01643-31645	WASHER	3	SN: 450001-454228
14	2A5-01-11330	CUSHION	4	SN: 450001-454228
15	2A5-01-11261	PLATE	2	SN: 450001-454228
16	2A5-01-11271	PLATE	2	SN: 450001-454228
17	2A5-01-11590	PLATE	2	SN: 450001-454228
18	01011-81655	BOLT	2	SN: 450001-454228
19	01643-31645	WASHER	2	SN: 450001-454228
20	20Y-01-12270	BOLT	2	SN: 450001-454228
21	01643-31645	WASHER	2	SN: 450001-454228

Reference: B0100-001001

Open this exact parts catalogue on K-Part

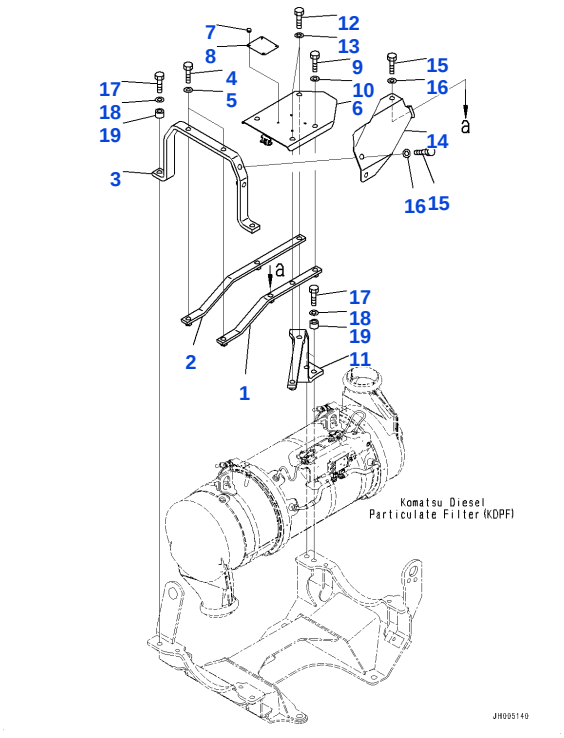

Reference: B0100-001002

B001002 ENGINE MOUNTING, GUARD(#450001-454228)

Item	Part No.	Part Name	Qty	Options
1	2A5-01-11660	BRACKET	1	SN: 450001-454228
2	2A5-01-11690	BRACKET	1	SN: 450001-454228
3	2A5-01-11640	BRACKET	1	SN: 450001-454228
4	01010-81240	BOLT	2	SN: 450001-454228
5	01643-31232	WASHER	2	SN: 450001-454228
	2A5-01-11601	COVER ASSEMBLY	1	SN: 450001-454228
6		• COVER	1	SN: 450001-454228
7	6251-11-8850	• REBET	4	SN: 450001-454228
8	09817-A0752	• PLATE, WARNING, HIGH TEMPERATURE	1	SN: 450001-454228
9	01010-81230	BOLT	2	SN: 450001-454228
10	01643-31232	WASHER	2	SN: 450001-454228
11	2A5-01-11650	BRACKET	1	SN: 450001-454228
12	01010-81240	BOLT	2	SN: 450001-454228
13	01643-31232	WASHER	2	SN: 450001-454228
14	2A5-01-11680	COVER	1	SN: 450001-454228
15	01010-81230	BOLT	3	SN: 450001-454228
16	01643-31232	WASHER	3	SN: 450001-454228
17	01010-81255	BOLT	4	SN: 450001-454228
18	01643-31232	WASHER	4	SN: 450001-454228
19	2A5-01-11790	SPACER	4	SN: 450001-454228
		[C1] - PARTS WITH THIS SYMBOL CANNOT BE SUPPLIED SEPARATELY. SUPPLIED WITH ASSEMBLED PARTS.		SN: UP

Reference: B0100-001002

Open this exact parts catalogue on K-Part

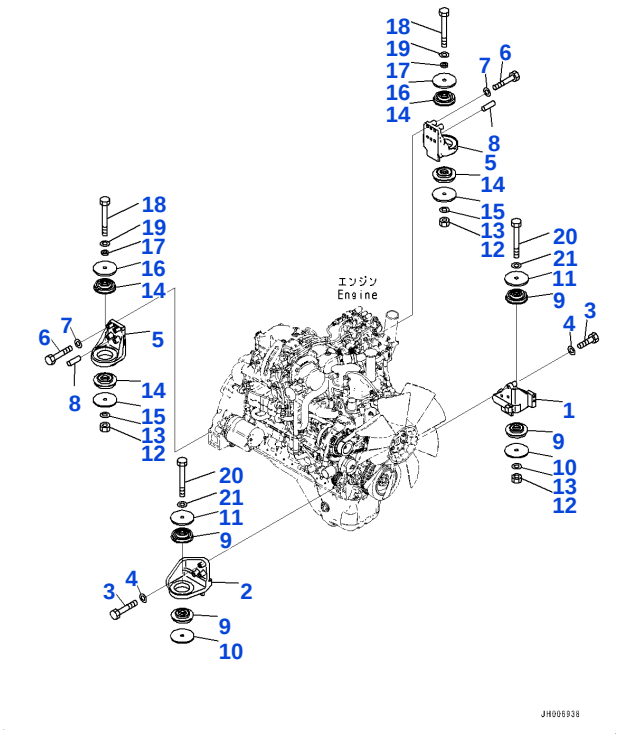

Reference: B0100-002001

B002001 ENGINE INSTALLATION, RELATED PARTS (#454229-)

Item	Part No.	Part Name	Qty	Options
1	2A5-01-11880	BRACKET	1	SN: 454229-UP
2	2A5-01-11890	BRACKET	1	SN: 454229-UP
3	2A5-01-11230	BOLT	6	SN: 454229-UP
4	01643-31232	WASHER	6	SN: 454229-UP
5	2A5-01-11910	BRACKET	2	SN: 454229-UP
6	2A5-01-11230	BOLT	8	SN: 454229-UP
7	01643-31232	WASHER	8	SN: 454229-UP
8	04020-01228	PIN, DOWEL	4	SN: 454229-UP
9	2A5-01-11320	CUSHION	4	SN: 454229-UP
10	2A5-01-11261	PLATE	2	SN: 454229-UP
11	2A5-01-11271	PLATE	2	SN: 454229-UP
12	01580-11613	NAT	3	SN: 454229-UP
13	01643-31645	WASHER	3	SN: 454229-UP
14	2A5-01-11330	CUSHION	4	SN: 454229-UP
15	2A5-01-11261	PLATE	2	SN: 454229-UP
16	2A5-01-11271	PLATE	2	SN: 454229-UP
17	2A5-01-11590	PLATE	2	SN: 454229-UP
18	01011-81655	BOLT	2	SN: 454229-UP
19	01643-31645	WASHER	2	SN: 454229-UP
20	20Y-01-12270	BOLT	2	SN: 454229-UP
21	01643-31645	WASHER	2	SN: 454229-UP

Reference: B0100-002001

Open this exact parts catalogue on K-Part

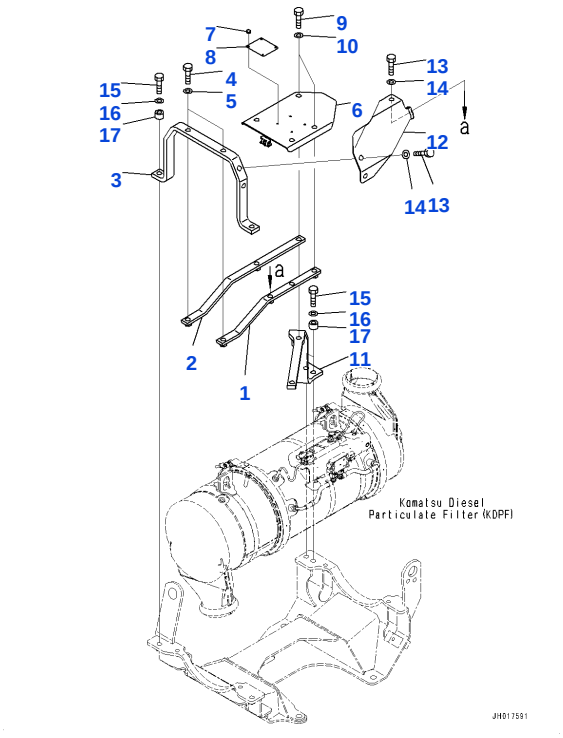

Reference: B0100-002002

B002002 ENGINE INSTALLATION, GUARD(#454229-)

Item	Part No.	Part Name	Qty	Options
1	2A5-01-11661	BRACKET	1	SN: 454229-UP
2	2A5-01-11691	BRACKET	1	SN: 454229-UP
3	2A5-01-11641	BRACKET	1	SN: 454229-UP
4	01010-81235	BOLT	2	SN: 454229-UP
5	01643-31232	WASHER	2	SN: 454229-UP
	2A5-01-11601	COVER ASSEMBLY	1	SN: 454229-UP
6		• COVER	1	SN: 454229-UP
7	6251-11-8850	• REBET	4	SN: 454229-UP
8	09817-A0752	• PLATE, WARNING, HIGH TEMPERATURE	1	SN: 454229-UP
9	01010-81235	BOLT	4	SN: 454229-UP
10	01643-31232	WASHER	4	SN: 454229-UP
11	2A5-01-11651	BRACKET	1	SN: 454229-UP
12	2A5-01-11681	COVER	1	SN: 454229-UP
13	01010-81235	BOLT	3	SN: 454229-UP
14	01643-31232	WASHER	3	SN: 454229-UP
15	01010-81260	BOLT	4	SN: 454229-UP
16	01643-31232	WASHER	4	SN: 454229-UP
17	2A5-01-11790	SPACER	4	SN: 454229-UP
		[C1] - PARTS WITH THIS SYMBOL CANNOT BE SUPPLIED SEPARATELY. SUPPLIED WITH ASSEMBLED PARTS.		SN: UP

Reference: B0100-002002

Open this exact parts catalogue on K-Part

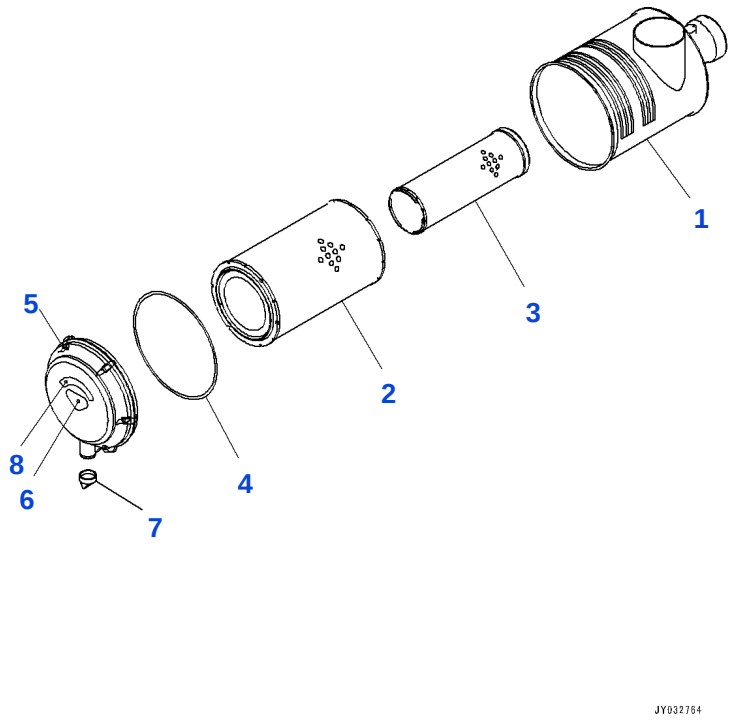

Reference: B0200-001001

B003001 ENGINE RELATED PARTS, AIR CLEANER COMPONENTS(#450001-)

Item	Part No.	Part Name	Qty	Options
1	6755-81-7100	AIR CLEANER	1	SN: 450001-UP
	600-185-3200	• ELEMENT ASSEMBLY	1	SN: 450001-UP
2	600-185-3110	• • ELEMENT, OUTER	1	SN: 450001-UP
3		• • ELEMENT, INNER	1	SN: 450001-UP
4	600-184-1370	• • O-RING	1	SN: 450001-UP
5	600-184-1310	• COVER ASSEMBLY	1	SN: 450001-UP
6	600-184-2810	• • PLATE, MARK, TOP	1	SN: 450001-UP
7	600-184-1350	• VALVE, VACUATOR	1	SN: 450001-UP
8	600-181-1930	• PLATE, AIR CLEANER CLEANING COUNT SEAL	1	SN: 450001-UP
		[C1] - PARTS WITH THIS SYMBOL CANNOT BE SUPPLIED SEPARATELY. SUPPLIED WITH ASSEMBLED PARTS.		SN: UP

Reference: B0200-001001

Open this exact parts catalogue on K-Part

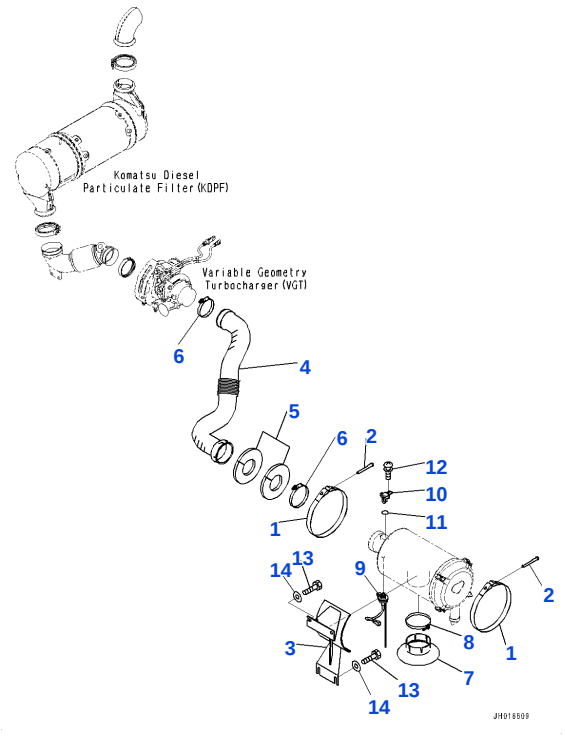

Reference: B0200-001002

B003002 ENGINE RELATED PARTS, AIR CLEANER INSTALLATION(#450001-)

Item	Part No.	Part Name	Qty	Options
1	6131-11-4520	BAND	2	SN: 450001-UP
2	6643-11-4641	BOLT	2	SN: 450001-UP
3	2A5-01-12210	BRACKET	1	SN: 450001-UP
4	2A5-01-11111	HOSE	1	SN: 450001-UP
5	2A5-54-12572	SHEET	2	SN: 450001-UP
6	07299-00105	CLAMP	2	SN: 450001-UP
	2A5-01-11101	HOOD ASSEMBLY	1	SN: 450001-UP
7	2A5-01-11121	• FOOD	1	SN: 450001-UP
8	2A5-01-11130	• CLAMP	1	SN: 450001-UP
9	7861-93-1430	SENSOR, DUST INDICATOR	1	SN: 450001-UP
10	6252-81-7800	AIRFLOW SENSOR	1	SN: 450001-UP
	6252-81-7900	AIRFLOW SENSOR	1	SN: 450001-700005
11	6252-81-7910	• O-RING	1	SN: 450001-UP
12	01023-10412	SCREW	2	SN: 450001-UP
13	01010-81225	BOLT	4	SN: 450001-UP
14	175-54-34170	WASHER	4	SN: 450001-UP
		[B1] - INDICATES THE PART WHOSE SUPPLY HAS BEEN STOPPED. THE PARTS SHOWN IN THE ROW ABOVE WILL BE SUPPLIED IN PLACE OF THE PARTS WITH THIS SYMBOL.		SN: UP

Reference: B0200-001002

Open this exact parts catalogue on K-Part

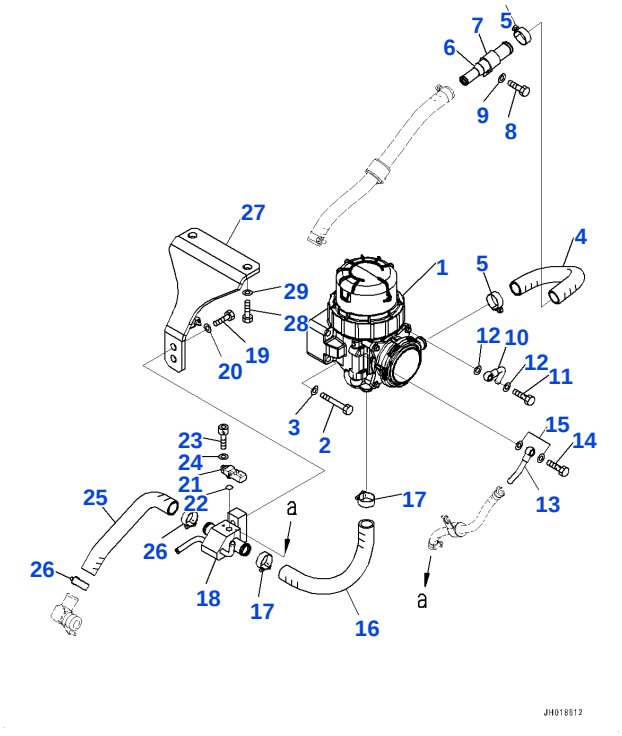

Reference: B0200-001003

B003003 ENGINE RELATED PARTS, KOMATSU CLOSED CRANKCASE VENTILATION (KCCV) (#450001-)

Item	Part No.	Part Name	Qty	Options
1	600-332-2211	VENTILATOR	1	SN: 451358-UP
	600-332-2210	VENTILATOR	1	SN: 450001-451357
	600-331-2900	• ELEMENT KIT	1	SN: 450001-UP
2	01010-81070	BOLT	4	SN: 450001-UP
3	01643-31032	WASHER	4	SN: 450001-UP
4	2A5-01-11851	HOSE	1	SN: 450001-UP
5	07281-00359	CLAMP, HOSE	2	SN: 450776-UP
	07281-00419	CLAMP, HOSE	2	SN: 450001-450775
6	6755-21-7140	TUBE	1	SN: 450001-UP
7	04434-52512	CLIP	1	SN: 450001-UP
8	01010-81230	BOLT	1	SN: 450001-UP
9	01643-31232	WASHER	1	SN: 450001-UP
10	6746-21-7460	JOINT	1	SN: 450001-UP
11	07206-30812	BOLT, JOINT	1	SN: 450001-UP
12	07005-01212	SEAL, WASHER	2	SN: 450001-UP
13	6755-21-7240	JOINT	1	SN: 450001-UP
14	07206-30812	BOLT, JOINT	1	SN: 450001-UP
15	07005-01212	SEAL, WASHER	2	SN: 450001-UP
16	2A5-01-11814	HOSE	1	SN: 450001-UP
17	07281-00359	CLAMP, HOSE	2	SN: 450776-UP
	07281-00419	CLAMP, HOSE	2	SN: 450001-450775
18	6755-21-7420	BLOCK	1	SN: 450001-UP
19	01010-81230	BOLT	2	SN: 450001-UP
20	01643-31232	WASHER	2	SN: 450001-UP
21	6252-11-2901	SENSOR, PRESSURE	1	SN: 457067-UP
	6252-11-2900	SENSOR, PRESSURE, CRANKCASE	1	SN: 450001-457066
22	6252-11-2800	• O-RING	1	SN: 450001-UP
23	600-331-1930	BOLT	1	SN: 450001-UP
24	01640-20508	WASHER	1	SN: 450001-UP
25	6755-21-7310	HOSE	1	SN: 450001-UP
26	07281-00359	CLAMP, HOSE	2	SN: 450776-UP
	07281-00419	CLAMP, HOSE	2	SN: 450001-450775
27	206-54-31451	BRACKET	1	SN: 450001-UP

Open this exact parts catalogue on K-Part

Item	Part No.	Part Name	Qty	Options
28	01010-81230	BOLT	2	SN: 450001-UP
29	01643-31232	WASHER	2	SN: 450001-UP
		[A1] - PARTS MARKED WITH THIS SYMBOL AND THE PARTS LISTED ON THE LINE IMMEDIATELY ABOVE CAN BE USED IN PLACE OF EACH OTHER.		SN: UP
		[A2]-IN PLACE OF THE PARTS WITH THIS SYMBOL, YOU CAN USE THE PARTS LISTED ON THE LINE ABOVE IT.		SN: UP

Reference: B0200-001003

Open this exact parts catalogue on K-Part

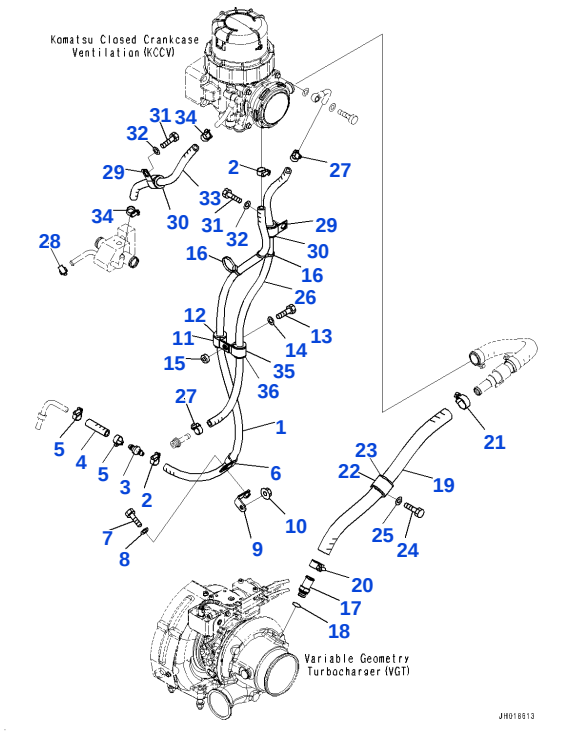

Reference: B0200-001004

B003004 ENGINE RELATED PARTS, KOMATSU CLOSED CRANKCASE VENTILATION (KCCV) PIPING(#450001-450751)

Item	Part No.	Part Name	Qty	Options
1	2A5-01-11831	HOSE	1	SN: 450001-@
2	07281-00197	CLAMP	2	SN: 450001-@
3	6261-51-2810	VALVE, CHECK	1	SN: 450001-@
4	07260-20906	HOSE	1	SN: 450001-@
5	07281-00197	CLAMP	2	SN: 450001-@
6	04434-51608	CLIP	1	SN: 450001-@
7	01010-80825	BOLT	1	SN: 450001-@
8	01643-30823	WASHER	1	SN: 450001-@
9	6755-21-7150	BRACKET	1	SN: 450001-@
10	01584-00806	NAT	1	SN: 450001-@
11	04434-52310	CLIP	1	SN: 450001-@
12	2A5-01-11580	CUSHION	1	SN: 450001-@
13	01010-80825	BOLT	1	SN: 450001-@
14	01643-30823	WASHER	1	SN: 450001-@
15	22N-957-1420	COLOR	1	SN: 450001-@
16	134-03-61410	BAND	2	SN: 450001-450751
17	6755-21-7121	JOINT	1	SN: 450001-@
18	6755-21-7110	O-RING	1	SN: 450001-@
19	2A5-01-11861	HOSE	1	SN: 450001-@
20	07281-00289	CLAMP	1	SN: 450001-@
21	07281-00289	CLAMP	1	SN: 450001-@
22	04434-53412	CLIP	1	SN: 450001-@
23	07095-40627	CUSHION	1	SN: 450001-@
24	01010-81230	BOLT	1	SN: 450001-@
25	01643-31232	WASHER	1	SN: 450001-@
26	6755-21-7261	HOSE	1	SN: 450001-@
27	07281-00197	CLAMP	2	SN: 450001-@
28	07281-00197	CLAMP	1	SN: 450001-@
29	04434-52312	CLIP	2	SN: 450001-@
30	2A5-01-11580	CUSHION	2	SN: 450001-@
31	01010-81230	BOLT	2	SN: 450001-@
32	01643-31232	WASHER	2	SN: 450001-@
33	6755-21-7430	HOSE	1	SN: 450001-@

Open this exact parts catalogue on K-Part

Item	Part No.	Part Name	Qty	Options
34	07281-00197	CLAMP	2	SN: 450001-@
35	04434-52310	CLIP	1	SN: 450001-@
36	2A5-01-11580	CUSHION	1	SN: 450001-@

Reference: B0200-001004

Open this exact parts catalogue on K-Part

Get the complete PDF catalogue

Komatsu PC200-10 (JPN) S/N 450001-UP (Japanese)

$89

with PayPal | Store cart: $99

Buy this PDF on Manuals Komatsu

Check the model, serial range and language before payment.

Download instructions are emailed after payment confirmation.

This free sample contains 10 catalogue pages.