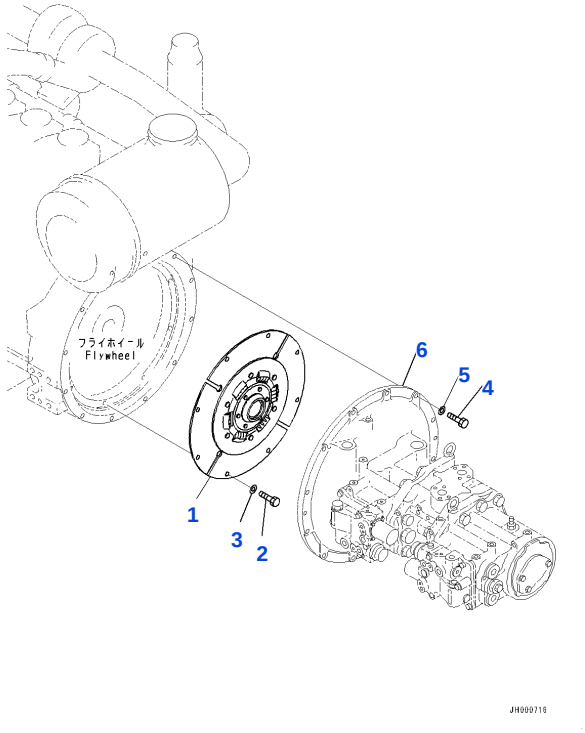

Reference: B0000-001001

B001001 DAMPER, (#80001-)

Item	Part No.	Part Name	Qty	Options
1	207-01-61311	DAMPER DISC ASSEMBLY	1	SN: 80001-UP
2	01010-81225	BOLT	8	SN: 80001-UP
3	01643-31232	WASHER	8	SN: 80001-UP
4	01010-81240	BOLT	12	SN: 80001-UP
5	01643-31232	WASHER	12	SN: 80001-UP
6	708-2J-11111	CASE, FRONT (HYDRAULIC PUMP, PISTON PUMP)	-1	SN: UP
	708-2J-11110	CASE, FRONT (HYDRAULIC PUMP, PISTON PUMP)	-1	SN: UP

Reference: B0000-001001

Open this exact parts catalogue on K-Part

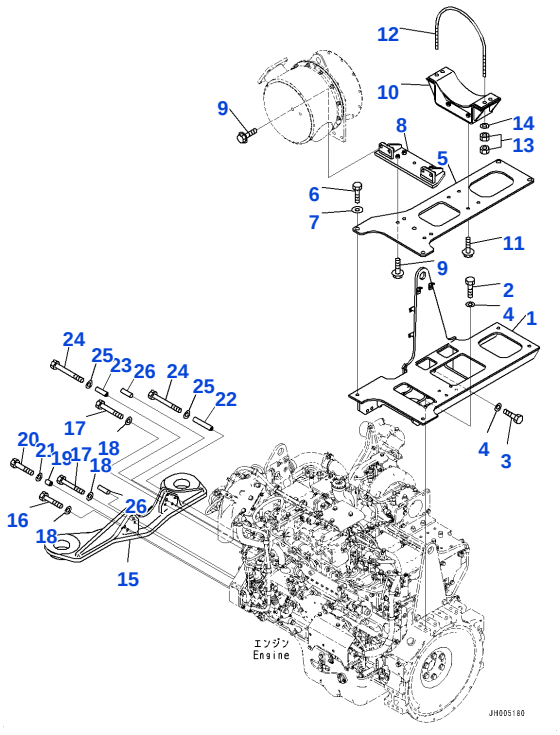

Reference: B0000-002001

B002001 ENGINE RELATED PARTS, INSTALLATION BRACKET (#80001-)

Item	Part No.	Part Name	Qty	Options
1	208-01-41511	BRACKET	1	SN: 80001-UP
2	01010-81640	BOLT	8	SN: 80001-UP
3	01010-81670	BOLT	2	SN: 80001-UP
4	01643-31645	WASHER	10	SN: 80001-UP
5	208-01-41521	BRACKET	1	SN: 80001-UP
6	01010-81240	BOLT	4	SN: 80001-UP
7	175-54-34170	WASHER	4	SN: 80001-UP
8	208-01-41540	BRACKET	1	SN: 80001-UP
9	01435-01245	BOLT, FLANGE TYPE	8	SN: 80001-UP
10	208-01-41531	BRACKET	1	SN: 80001-UP
11	01435-01245	BOLT, FLANGE TYPE	4	SN: 80001-UP
12	208-01-41551	BOLT	2	SN: 80001-UP
13	01581-01210	NUT, STAINLESS	8	SN: 80001-UP
14	208-01-41560	WASHER	4	SN: 80001-UP
15	208-01-41211	BRACKET	1	SN: 80001-UP
16	01011-81005	BOLT	3	SN: 80001-UP
17	01011-81000	BOLT	2	SN: 80001-UP
18	01643-31032	WASHER	5	SN: 80001-UP
19	6167-21-5910	SPACER	1	SN: 80001-UP
20	01010-81085	BOLT	1	SN: 80001-UP
21	01643-31032	WASHER	1	SN: 80001-UP
22	208-01-41240	SPACER	1	SN: 80001-UP
23	208-01-41250	SPACER	1	SN: 80001-UP
24	208-01-41260	BOLT	2	SN: 80001-UP
25	01643-31032	WASHER	2	SN: 80001-UP
26	04020-01228	PIN, DOWEL	2	SN: 80001-UP

Reference: B0000-002001

Open this exact parts catalogue on K-Part

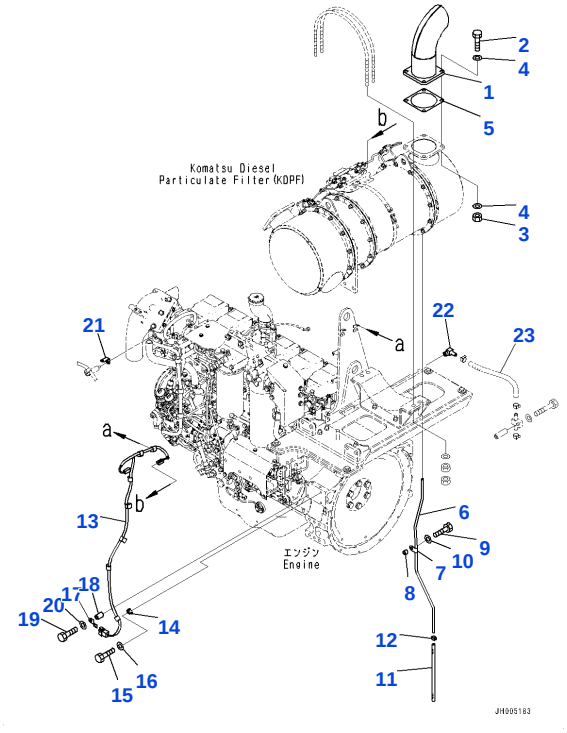

Reference: B0000-002002

B002002 ENGINE RELATED PARTS, MOUNTING PARTS(#80001-80018)

Item	Part No.	Part Name	Qty	Options
1	208-01-41313	PIPE	1	SN: 80001-80015
2	01020-11245	BOLT, STAINLESS	4	SN: 80001-80018
3	01581-01210	NUT, STAINLESS	4	SN: 80001-80018
4	01643-31232	WASHER	8	SN: 80001-80018
5	6211-11-5490	GASKET	1	SN: 80001-80018
6	208-01-41322	TUBE	1	SN: 80001-80018
7	6991-11-5990	CLAMP	1	SN: 80001-80018
8	6631-11-6390	SPACER	1	SN: 80001-80018
9	01010-81035	BOLT	1	SN: 80001-80018
10	01643-31032	WASHER	1	SN: 80001-80018
11	208-01-41330	HOSE	1	SN: 80001-80018
12	07285-00130	CLIP	1	SN: 80001-80018
13	208-06-41242	WIRING HARNESS	1	SN: 80001-80395
14	6252-81-9510	CLIP	1	SN: 80001-80018
15	01010-81020	BOLT	1	SN: 80001-80018
16	01643-31032	WASHER	1	SN: 80001-80018
17	08193-30010	CLIP	1	SN: 80001-80018
18	6144-11-5630	SPACER	1	SN: 80001-80018
19	01010-81055	BOLT	1	SN: 80001-80018
20	01643-31032	WASHER	1	SN: 80001-80018
21	6252-81-9630	CLIP	1	SN: 80001-80018
22	208-979-4331	ERBO	1	SN: 80001-80018
23	208-979-4340	HOSE (AIR CONDITIONER UNIT, HEATER HOSE CLAMP)	-1	SN: UP

Reference: B0000-002002

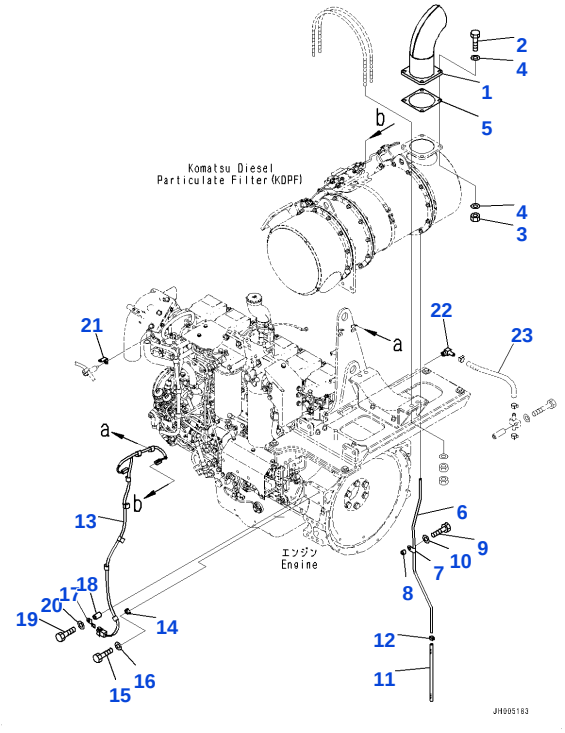

Reference: B0000-002002A

B002003 ENGINE RELATED PARTS, MOUNTING PARTS (#80019-)

Item	Part No.	Part Name	Qty	Options
1	208-01-41314	PIPE	1	SN: 80016-UP
2	01020-11245	BOLT, STAINLESS	4	SN: 80019-UP
3	01581-01210	NUT, STAINLESS	4	SN: 80019-UP
4	01643-31232	WASHER	8	SN: 80019-UP
5	6211-11-5491	GASKET	1	SN: 80421-UP
	6211-11-5490	GASKET	1	SN: 80019-80420
6	208-01-41322	TUBE	1	SN: 80019-UP
7	6991-11-5990	CLAMP	1	SN: 80019-UP
8	6631-11-6390	SPACER	1	SN: 80019-UP
9	01010-81035	BOLT	1	SN: 80019-UP
10	01643-31032	WASHER	1	SN: 80019-UP
11	208-01-41330	HOSE	1	SN: 80019-UP
12	07285-00130	CLIP	1	SN: 80019-UP
13	208-06-41243	WIRING HARNESS	1	SN: 80396-UP
14	6252-81-9511	CLIP	1	SN: 80019-UP
15	01010-81020	BOLT	1	SN: 80019-UP
16	01643-31032	WASHER	1	SN: 80019-UP
17	08193-30010	CLIP	1	SN: 80019-UP
18	6144-11-5630	SPACER	1	SN: 80019-UP
19	01010-81055	BOLT	1	SN: 80019-UP
20	01643-31032	WASHER	1	SN: 80019-UP
21	6252-81-9630	CLIP	1	SN: 80019-UP
22	208-979-4331	ERBO	1	SN: 80019-UP
		[A2]-IN PLACE OF THE PARTS WITH THIS SYMBOL, YOU CAN USE THE PARTS LISTED ON THE LINE ABOVE IT.		SN: UP

Reference: B0000-002002A

Open this exact parts catalogue on K-Part

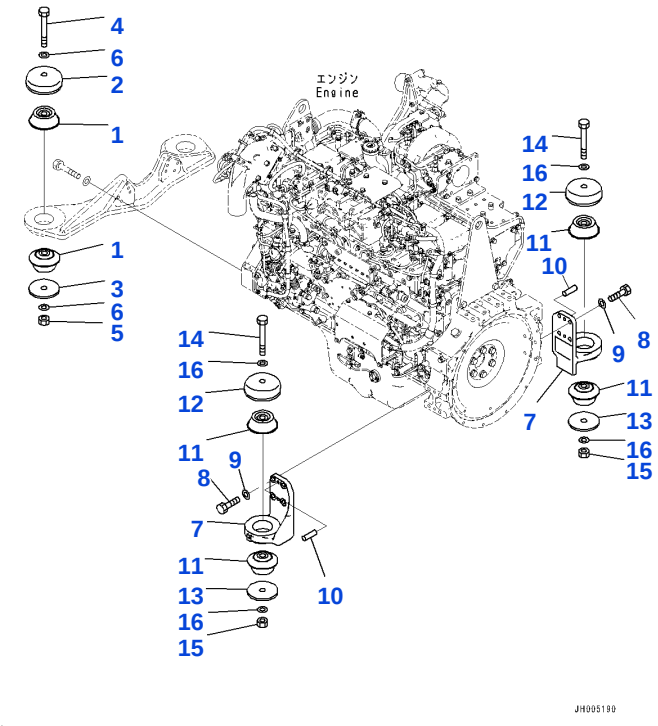

Reference: B0100-001001

B003001 ENGINE MOUNTING RELATED PARTS, (#80001-)

Item	Part No.	Part Name	Qty	Options
1	207-01-35140	CUSHION	4	SN: 80001-UP
2	207-01-61170	STOP	2	SN: 80001-UP
3	208-01-11161	WASHER	2	SN: 80001-UP
4	208-01-11181	BOLT	2	SN: 80001-UP
5	01580-12419	NAT	2	SN: 80001-UP
6	01643-32460	WASHER	4	SN: 80001-UP
7	208-01-71120	BRACKET	2	SN: 80001-UP
8	01010-81650	BOLT	8	SN: 80421-UP
	01010-61650	BOLT	8	SN: 80001-80420
9	01643-31645	WASHER	8	SN: 80001-UP
10	04020-01228	PIN, DOWEL	4	SN: 80001-UP
11	208-01-41221	CUSHION	4	SN: 80001-UP
12	207-01-61170	STOP	2	SN: 80001-UP
13	208-01-11161	WASHER	2	SN: 80001-UP
14	208-01-11181	BOLT	2	SN: 80001-UP
15	01580-12419	NAT	2	SN: 80001-UP
16	01643-32460	WASHER	4	SN: 80001-UP

Reference: B0100-001001

Open this exact parts catalogue on K-Part

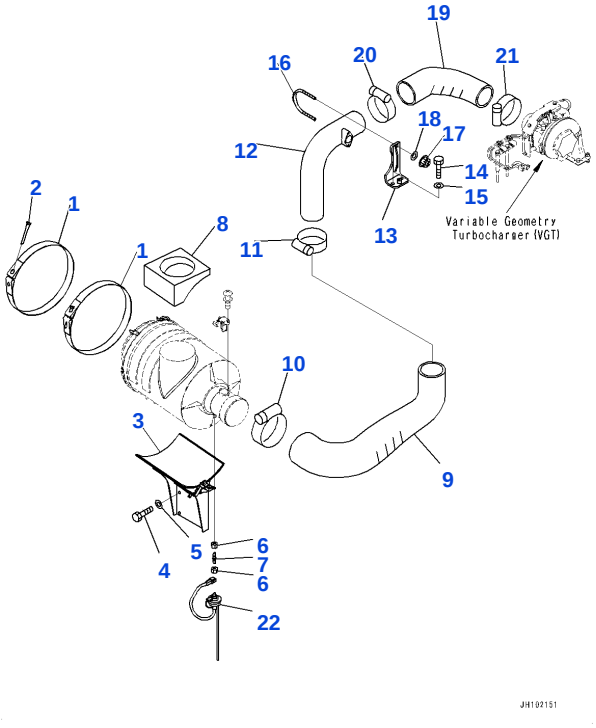

Reference: B0200-001001

B004001 AIR CLEANER, (1/2) (#80001-)

Item	Part No.	Part Name	Qty	Options
1	6151-11-9970	BAND ASSEMBLY	2	SN: 80001-UP
2	6643-11-4641	BOLT	2	SN: 80001-UP
3	208-01-41151	BRACKET	1	SN: 80001-UP
4	01010-81230	BOLT	4	SN: 80001-UP
5	01643-31232	WASHER	4	SN: 80001-UP
6	11Y-01-11920	JOINT	2	SN: 80001-UP
7	6205-81-7190	CONNECTOR	1	SN: 80001-UP
8	208-01-41161	SEAL	1	SN: 80001-UP
9	208-01-41131	HOSE	1	SN: 80001-UP
10	208-01-72180	CLAMP	1	SN: 80001-UP
11	07299-00130	CLAMP	1	SN: 80001-UP
12	208-01-41121	TUBE	1	SN: 80001-UP
13	208-01-41142	BRACKET	1	SN: 80001-UP
14	01010-81030	BOLT	2	SN: 80001-UP
15	01643-31032	WASHER	2	SN: 80001-UP
16	07283-31185	CLIP	1	SN: 80001-UP
17	01597-01211	NAT	2	SN: 80001-UP
18	01643-31232	WASHER	2	SN: 80001-UP
19	208-01-41111	HOSE	1	SN: 80001-UP
20	07299-00130	CLAMP	1	SN: 80001-UP
21	07299-00120	CLAMP	1	SN: 80001-UP
22	7861-93-1430	SENSOR, DUST INDICATOR	1	SN: 80001-UP

Reference: B0200-001001

Open this exact parts catalogue on K-Part

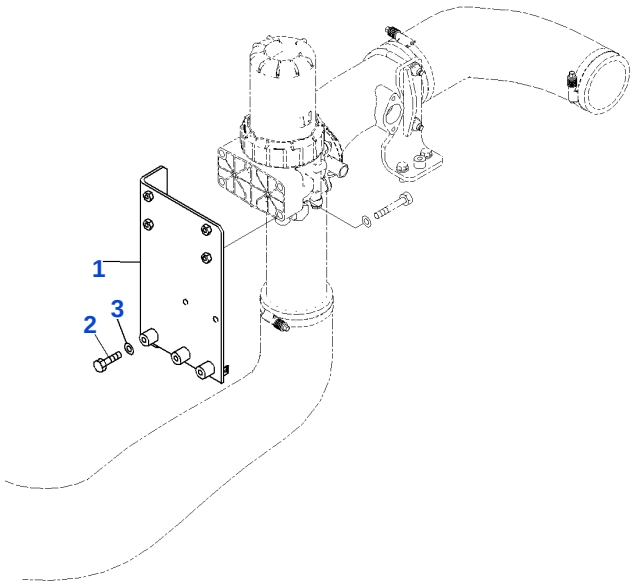

Reference: B0200-001002

B004002 AIR CLEANER, (2/2) (#80001-)

Item	Part No.	Part Name	Qty	Options
1	208-01-41173	BRACKET	1	SN: 80001-UP
2	01010-81230	BOLT	3	SN: 80001-UP
3	01643-31232	WASHER	3	SN: 80001-UP

Reference: B0200-001002

Open this exact parts catalogue on K-Part

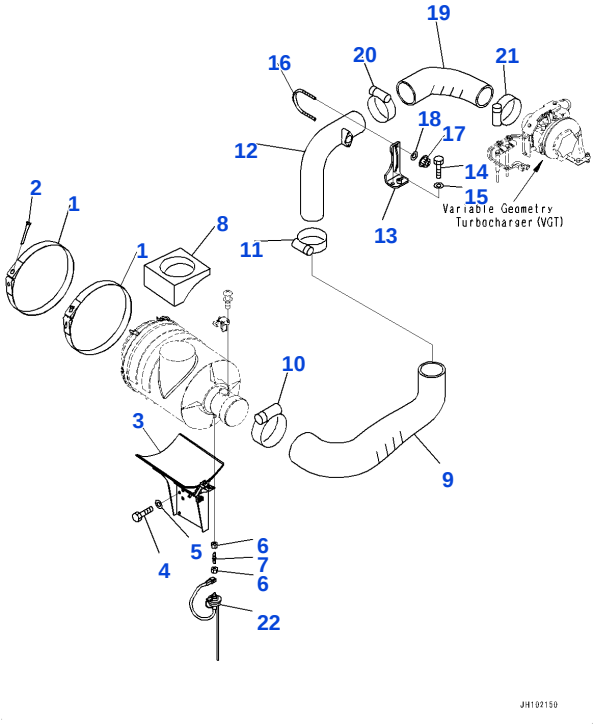

Reference: B0200-002001

B005001 AIR CLEANER, (1/2) (FUEL ELECTRIC PUMP) (#80001-)

Item	Part No.	Part Name	Qty	Options
1	6151-11-9970	BAND ASSEMBLY	2	SN: 80001-UP
2	6643-11-4641	BOLT	2	SN: 80001-UP
3	208-01-42210	BRACKET	1	SN: 80001-UP
4	01010-81230	BOLT	4	SN: 80001-UP
5	01643-31232	WASHER	4	SN: 80001-UP
6	11Y-01-11920	JOINT	2	SN: 80001-UP
7	6205-81-7190	CONNECTOR	1	SN: 80001-UP
8	208-01-41161	SEAL	1	SN: 80001-UP
9	208-01-41131	HOSE	1	SN: 80001-UP
10	208-01-72180	CLAMP	1	SN: 80001-UP
11	07299-00130	CLAMP	1	SN: 80001-UP
12	208-01-41121	TUBE	1	SN: 80001-UP
13	208-01-41142	BRACKET	1	SN: 80001-UP
14	01010-81030	BOLT	2	SN: 80001-UP
15	01643-31032	WASHER	2	SN: 80001-UP
16	07283-31185	CLIP	1	SN: 80001-UP
17	01597-01211	NAT	2	SN: 80001-UP
18	01643-31232	WASHER	2	SN: 80001-UP
19	208-01-41111	HOSE	1	SN: 80001-UP
20	07299-00130	CLAMP	1	SN: 80001-UP
21	07299-00120	CLAMP	1	SN: 80001-UP
22	7861-93-1430	SENSOR, DUST INDICATOR	1	SN: 80001-UP

Reference: B0200-002001

Open this exact parts catalogue on K-Part

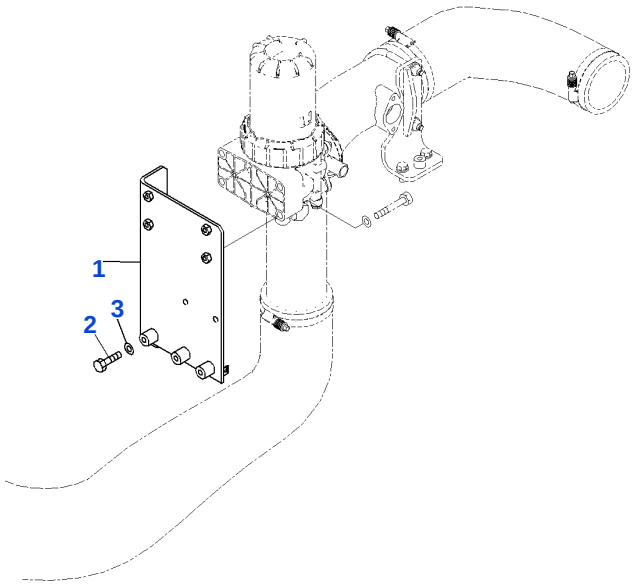

Reference: B0200-002002

B005002 AIR CLEANER, (2/2) (#80001-)

Item	Part No.	Part Name	Qty	Options
1	208-01-41173	BRACKET	1	SN: 80001-UP
2	01010-81230	BOLT	3	SN: 80001-UP
3	01643-31232	WASHER	3	SN: 80001-UP

Reference: B0200-002002

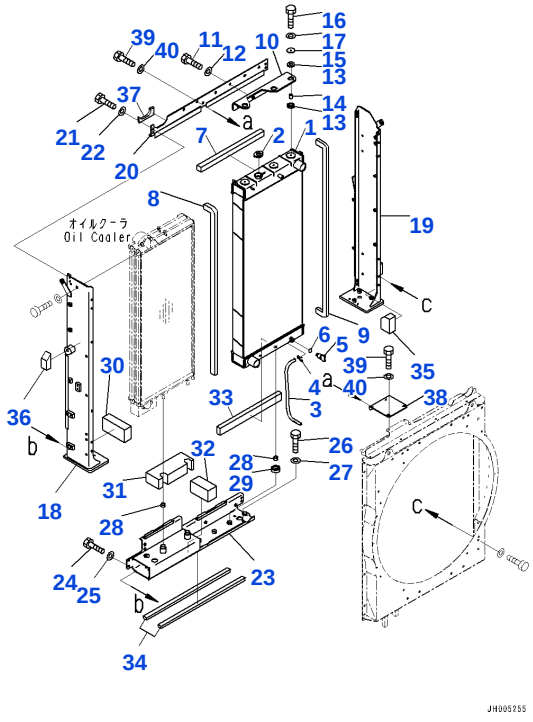

Reference: C0100-001001

C001001 COOLING DEVICE, RADIATOR(#80001-80420)

Item	Part No.	Part Name	Qty	Options
1	208-03-41111	RADIATOR ASSEMBLY	1	SN: 80001-80375
2	20Y-03-22110	CAP	1	SN: 80001-80420
3	205-03-71230	HOSE	1	SN: 80001-80375
4	20Y-03-11330	CLIP	1	SN: 80001-80375
5	205-03-62660	PLUG	1	SN: 80001-80375
6	07000-11007	• O-RING	1	SN: 80001-80375
7	208-03-41991	SEAL	1	SN: 80001-80375
8	208-03-42120	SEAL	1	SN: 80001-80375
9	208-03-42110	SEAL	1	SN: 80001-80375
10	208-03-42260	BRACKET	1	SN: 80001-80375
11	01010-81235	BOLT	4	SN: 80001-80375
12	01643-31232	WASHER	4	SN: 80001-80375
13	14X-03-51621	CUSHION	6	SN: 80001-80375
14	14X-03-51640	SPACER	3	SN: 80001-80375
15	14X-03-51770	WASHER	3	SN: 80001-80375
16	01010-81045	BOLT	3	SN: 80001-80375
17	01643-31032	WASHER	3	SN: 80001-80375
18	208-03-41181	FRAME	1	SN: 80001-80375
19	208-03-41191	FRAME	1	SN: 80001-80375
20	208-03-41211	BRACKET	1	SN: 80001-80375
21	01010-81225	BOLT	4	SN: 80001-80375
22	01643-31232	WASHER	4	SN: 80001-80375
23	208-03-41220	FRAME	1	SN: 80001-80375
24	01010-81025	BOLT	4	SN: 80001-80375
25	01643-31032	WASHER	4	SN: 80001-80375
26	01010-81020	BOLT	4	SN: 80001-80375
27	01643-31032	WASHER	4	SN: 80001-80375
28	22B-03-12590	CUSHION	6	SN: 80001-80375
29	208-03-71380	CUSHION	4	SN: 80001-80375
30	208-03-42131	SEAL	1	SN: 80001-80375
31	208-03-42140	SEAL	1	SN: 80001-80375
32	208-03-42170	SEAL	1	SN: 80001-80375
33	208-03-42150	SEAL	1	SN: 80001-80375
34	208-03-42180	SEAL	2	SN: 80001-80375

Open this exact parts catalogue on K-Part

Get the complete PDF catalogue

Komatsu PC400-10 (JPN) S/N 80001-UP (Japanese)

$89

with PayPal | Store cart: $99

Buy this PDF on Manuals Komatsu

Check the model, serial range and language before payment.

Download instructions are emailed after payment confirmation.

This free sample contains 10 catalogue pages.