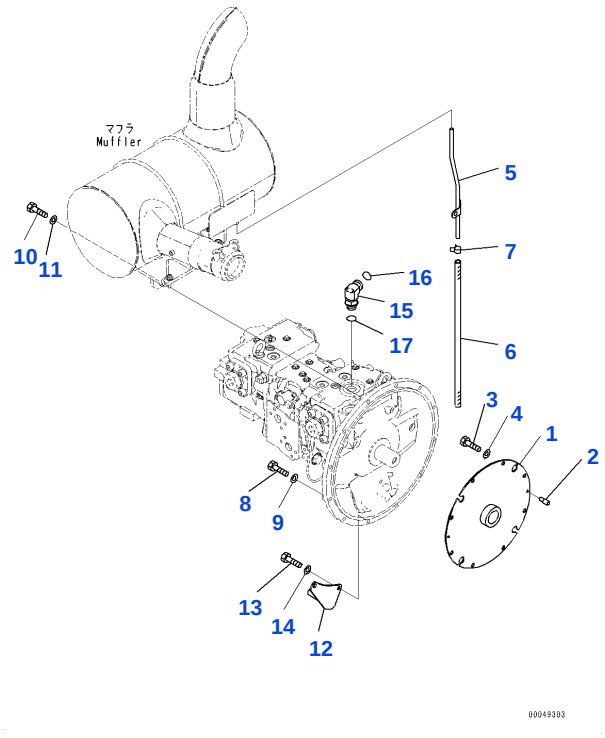

Reference: B0000-001001

B001001 Dumper, (1/2)(#350001-)

Item	Part No.	Part Name	Qty	Options
1	22U-01-21310	DUMPER	1	SN: 350001-UP
2	203-01-51120	PIN	2	SN: 350001-UP
3	01010-81020	BOLT	8	SN: 350001-UP
4	01643-31032	WASHER	8	SN: 350001-UP
5	6754-11-5440	TUBE	1	SN: 350001-UP
6	07260-20950	HOSE	1	SN: 350001-UP
7	07285-00155	CLIP	1	SN: 350001-UP
8	01010-81050	BOLT	8	SN: 350001-UP
9	01643-31032	WASHER	8	SN: 350001-UP
10	01010-81060	BOLT	2	SN: 350001-UP
11	01643-31032	WASHER	2	SN: 350001-UP
12	20Y-62-41573	BRACKET	1	SN: 358549-UP
	20Y-62-41572	BRACKET	1	SN: 350001-358548
13	01010-81050	BOLT	2	SN: 350001-UP
14	01643-31032	WASHER	2	SN: 350001-UP
15	02782-10628	ERBO	1	SN: 350001-UP
16	02896-11018	O-RING	1	SN: 350001-UP
17	07002-12434	O-RING	1	SN: 350001-UP
		[A2]-IN PLACE OF THE PARTS WITH THIS SYMBOL, YOU CAN USE THE PARTS LISTED ON THE LINE ABOVE IT.		SN: UP

Reference: B0000-001001

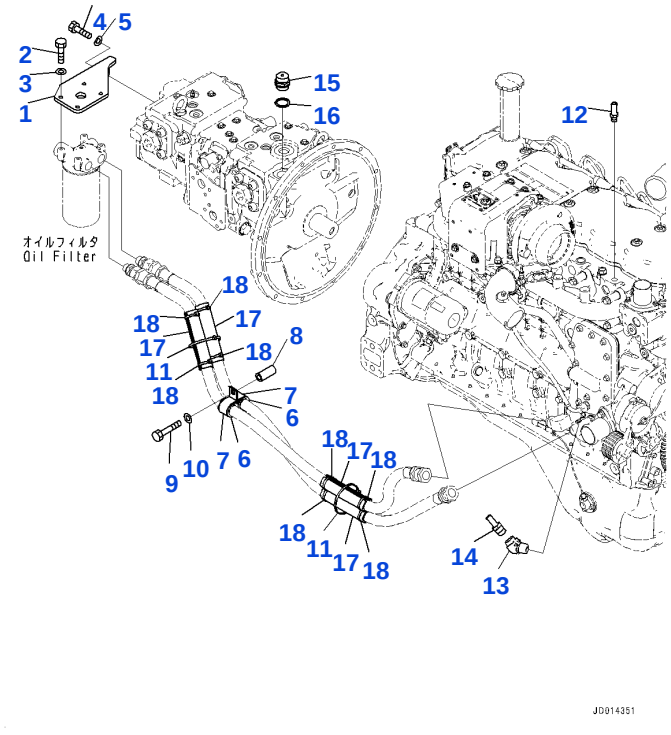

Reference: B0000-001002

B001002 Dumper, (2/2)(#350001-)

Item	Part No.	Part Name	Qty	Options
1	20Y-62-51433	PLATE	1	SN: 350001-UP
2	01010-80825	BOLT	4	SN: 350001-UP
3	01643-30823	WASHER	4	SN: 350001-UP
4	01010-81230	BOLT	2	SN: 350001-UP
5	01643-31232	WASHER	2	SN: 350001-UP
6	198-06-53630	CUSHION	2	SN: 350001-UP
7	04434-53412	CLIP	2	SN: 350001-UP
8	195-979-5190	COLOR	1	SN: 350001-UP
9	01010-81275	BOLT	1	SN: 350001-UP
10	01643-31232	WASHER	1	SN: 350001-UP
11	08034-20536	BAND	2	SN: 350001-UP
12	20Y-810-1120	NIPPLE	1	SN: 350001-UP
13	20Y-810-1161	ERBO	1	SN: 350001-UP
14	22U-979-1930	NIPPLE	1	SN: 350001-UP
15	07030-03034	BREEZER	1	SN: 350001-UP
16	07005-03016	SEAL, WASHER	1	SN: 350001-UP
17	20Y-01-41250	COVER	4	SN: 350001-UP
18	08034-20536	BAND	8	SN: 350001-UP

Reference: B0000-001002

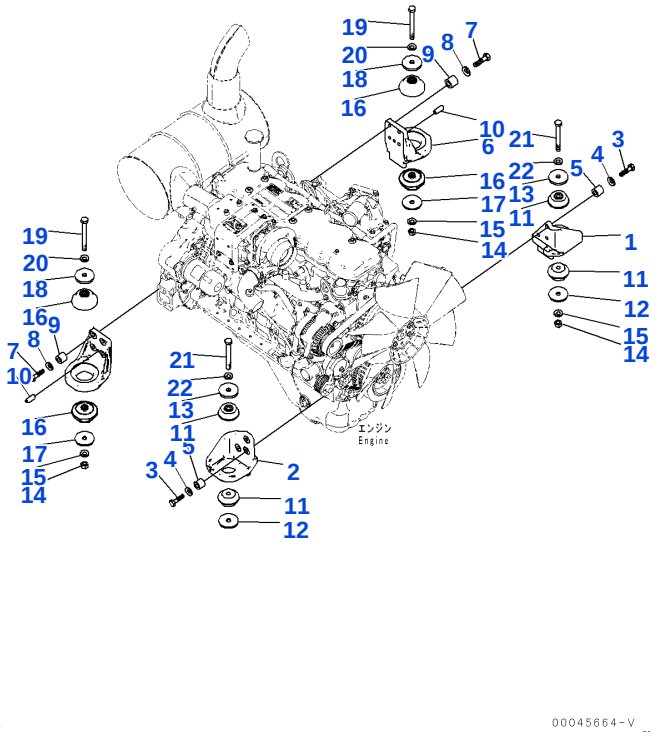

Reference: B0100-001001

B002001 Engine installation, (#350001-)

Item	Part No.	Part Name	Qty	Options
1	20Y-01-41162	BRACKET	1	SN: 350001-UP
2	20Y-01-41171	BRACKET	1	SN: 350001-UP
3	20Y-01-41230	BOLT	6	SN: 350001-UP
4	01643-31232	WASHER	6	SN: 350001-UP
5	20Y-01-21260	SPACER	6	SN: 350001-UP
6	20Y-01-41180	BRACKET	2	SN: 350001-UP
7	20Y-01-41230	BOLT	8	SN: 350001-UP
8	01643-31232	WASHER	8	SN: 350001-UP
9	20Y-01-21260	SPACER	8	SN: 350001-UP
10	04020-01228	PIN, DOWEL	2	SN: 350001-UP
11	20Y-01-12210	CUSHION	4	SN: 350001-UP
12	20Y-01-41210	PLATE	2	SN: 350001-UP
13	20Y-01-11141	WASHER	2	SN: 350001-UP
14	01580-11613	NAT	3	SN: 350001-UP
15	01643-31645	WASHER	3	SN: 350001-UP
16	20Y-01-12222	CUSHION	4	SN: 350001-UP
17	20Y-01-41210	PLATE	2	SN: 350001-UP
18	20Y-01-11141	WASHER	2	SN: 350001-UP
19	01011-81655	BOLT	2	SN: 350001-UP
20	01643-31645	WASHER	2	SN: 350001-UP
21	20Y-01-12270	BOLT	2	SN: 350001-UP
22	01643-31645	WASHER	2	SN: 350001-UP

Reference: B0100-001001

Open this exact parts catalogue on K-Part

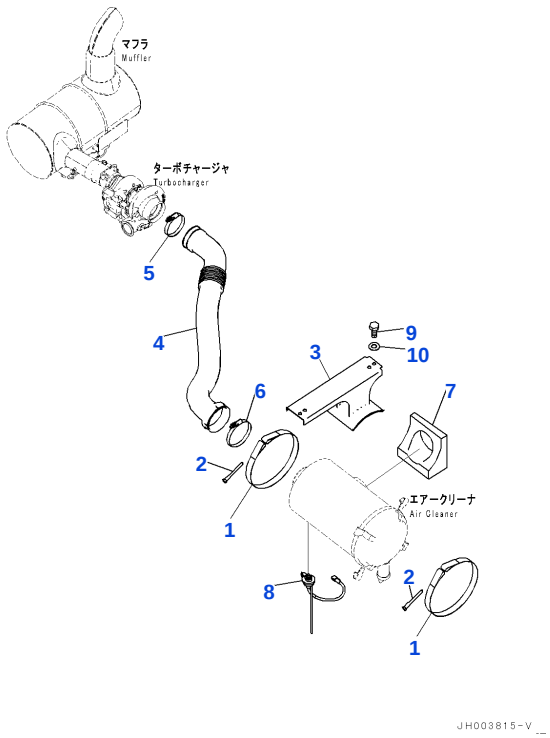

Reference: B0200-002002

B003001 Intake connector, air cleaner related parts (#350001-)

Item	Part No.	Part Name	Qty	Options
1	6222-81-7190	BAND	2	SN: 350001-UP
2	6643-11-4641	BOLT	2	SN: 350001-UP
3	20Y-01-41190	FRAME	1	SN: 350001-UP
4	20Y-01-41110	HOSE	1	SN: 350001-UP
5	07299-00105	CLAMP	1	SN: 350001-UP
6	07299-00130	CLAMP	1	SN: 350001-UP
7	20Y-01-41340	SEAL	1	SN: 350001-UP
8	7861-93-1470	SENSOR	1	SN: 358620-UP
	20Y-06-42910	SENSOR	1	SN: 351321-358619
	7861-93-1422	SENSOR	1	SN: 351282-351320
	7861-93-1421	SENSOR	1	SN: 350001-351281
9	01010-81230	BOLT	4	SN: 350001-UP
10	01643-31232	WASHER	4	SN: 350001-UP
		[A2]-IN PLACE OF THE PARTS WITH THIS SYMBOL, YOU CAN USE THE PARTS LISTED ON THE LINE ABOVE IT.		SN: UP

Reference: B0200-002002

Open this exact parts catalogue on K-Part

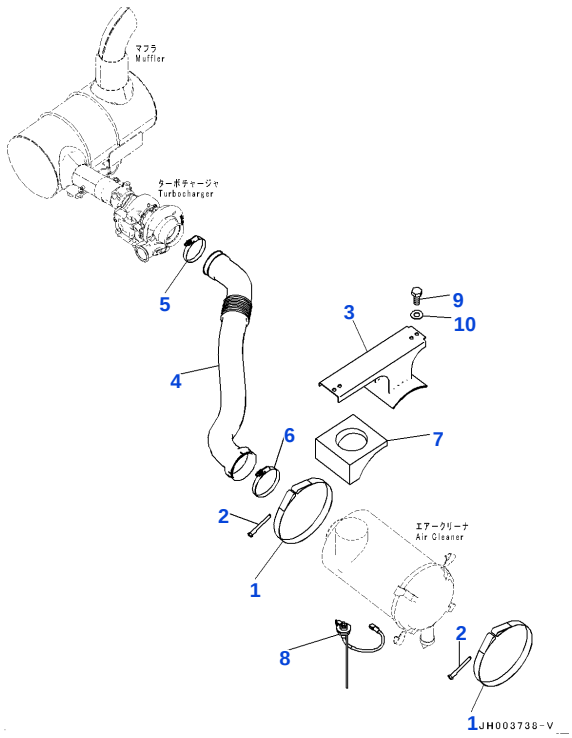

Reference: B0200-004002

B004001 INTAKE CONNECTOR, AIR CLEANER RELATED PARTS (WITH PRE-CLEANER) (#350001-)

Item	Part No.	Part Name	Qty	Options
1	6222-81-7190	BAND	2	SN: 350001-UP
2	6643-11-4641	BOLT	2	SN: 350001-UP
3	20Y-01-41190	FRAME	1	SN: 350001-UP
4	20Y-01-41110	HOSE	1	SN: 350001-UP
5	07299-00105	CLAMP	1	SN: 350001-UP
6	07299-00130	CLAMP	1	SN: 350001-UP
7	20Y-01-41220	SEAL	1	SN: 350001-UP
8	7861-93-1470	SENSOR	1	SN: 358620-UP
	20Y-06-42910	SENSOR	1	SN: 351321-358619
	7861-93-1422	SENSOR	1	SN: 351282-351320
	7861-93-1421	SENSOR	1	SN: 350001-351281
9	01010-81230	BOLT	4	SN: 350001-UP
10	01643-31232	WASHER	4	SN: 350001-UP
		[A2]-IN PLACE OF THE PARTS WITH THIS SYMBOL, YOU CAN USE THE PARTS LISTED ON THE LINE ABOVE IT.		SN: UP

Reference: B0200-004002

Open this exact parts catalogue on K-Part

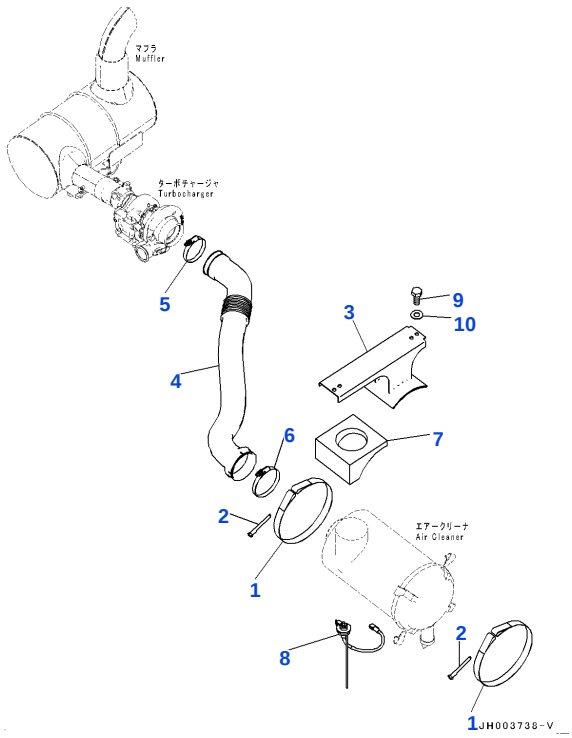

Reference: B0200-005002

B005001 INTAKE CONNECTOR, AIR CLEANER RELATED PARTS (FOR DUSTPROOF SPECIFICATION)(#350001-)

Item	Part No.	Part Name	Qty	Options
1	6222-81-7190	BAND	2	SN: 350001-UP
2	6643-11-4641	BOLT	2	SN: 350001-UP
3	20Y-01-41190	FRAME	1	SN: 350001-UP
4	20Y-01-41110	HOSE	1	SN: 350001-UP
5	07299-00105	CLAMP	1	SN: 350001-UP
6	07299-00130	CLAMP	1	SN: 350001-UP
7	20Y-01-41220	SEAL	1	SN: 350001-UP
8	7861-93-1470	SENSOR	1	SN: 358620-UP
	20Y-06-42910	SENSOR	1	SN: 351321-358619
	7861-93-1422	SENSOR	1	SN: 351282-351320
	7861-93-1421	SENSOR	1	SN: 350001-351281
9	01010-81230	BOLT	4	SN: 350001-UP
10	01643-31232	WASHER	4	SN: 350001-UP
		[A2]-IN PLACE OF THE PARTS WITH THIS SYMBOL, YOU CAN USE THE PARTS LISTED ON THE LINE ABOVE IT.		SN: UP

Reference: B0200-005002

Open this exact parts catalogue on K-Part

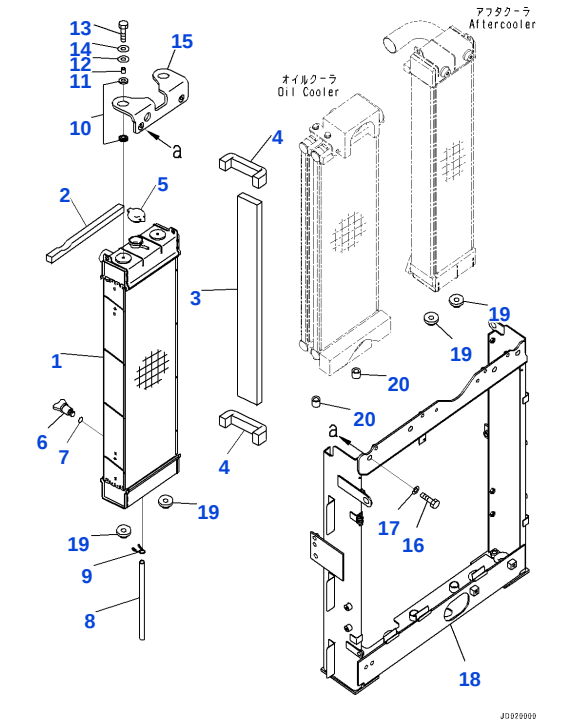

Reference: C0100-005001

C001001 Cooling device, radiator (#350001-353110)

Item	Part No.	Part Name	Qty	Options
	20Y-03-42452	RADIATOR ASSEMBLY	1	SN: 350001-353110
1		• RADIATOR	1	SN: 350001-353110
2	20Y-03-42650	• SHEET	1	SN: 350001-353110
3	20Y-03-42270	• SHEET	1	SN: 350001-353110
4	20Y-03-42160	• SHEET	2	SN: 350001-353110
5	20Y-03-22110	CAP	1	SN: 350001-353110
6	205-03-62660	PLUG	1	SN: 350001-353110
7	07000-11007	• O-RING	1	SN: 350001-353110
8	203-03-41410	HOSE	1	SN: 350001-353110
9	20Y-03-11330	CLIP	1	SN: 350001-353110
10	14X-03-51621	CUSHION	4	SN: 350001-353110
11	14X-03-51640	SPACER	2	SN: 350001-353110
12	14X-03-51770	WASHER	2	SN: 350001-353110
13	01010-81045	BOLT	2	SN: 350001-353110
14	01643-31032	WASHER	2	SN: 350001-353110
15	20Y-03-42840	BRACKET	1	SN: 350001-353110
16	01010-81225	BOLT	2	SN: 350001-353110
17	01643-31232	WASHER	2	SN: 350001-353110
18	20Y-03-42511	FRAME	1	SN: 350001-353110
19	20Y-03-41580	CUSHION	4	SN: 350001-353110
20	20Y-03-41590	CUSHION	2	SN: 350001-353110
		[C1] - PARTS WITH THIS SYMBOL CANNOT BE SUPPLIED SEPARATELY. SUPPLIED WITH ASSEMBLED PARTS.		SN: UP

Reference: C0100-005001

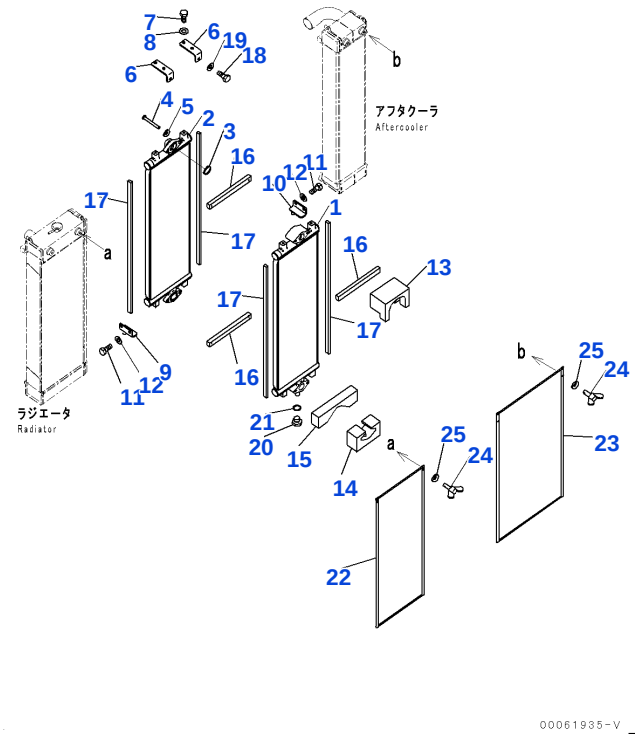

Reference: C0100-005002

C001002 Cooling device, oil cooler (#350001-353110)

Item	Part No.	Part Name	Qty	Options
	20Y-03-42461	OIL COOLER ASSEMBLY	1	SN: 350001-353110
1		• OIL COOLER	1	SN: 350001-353110
2		• OIL COOLER	1	SN: 350001-353110
3		• O-RING	2	SN: 350001-353110
4		• BOLT	4	SN: 350001-353110
5		• WASHER	4	SN: 350001-353110
6	20Y-03-42610	• BRACKET	2	SN: 350001-353110
7	01010-81025	• BOLT	4	SN: 350001-353110
8	01643-31032	• WASHER	4	SN: 350001-353110
9	20Y-03-42620	• BRACKET	1	SN: 350001-353110
10	20Y-03-42630	• BRACKET	1	SN: 350001-353110
11	01010-81025	• BOLT	4	SN: 350001-353110
12	01643-31032	• WASHER	4	SN: 350001-353110
13	206-03-21470	• SHEET	1	SN: 350001-353110
14	206-03-21520	• SHEET	1	SN: 350001-353110
15	20Y-03-42640	• SHEET	1	SN: 350001-353110
16	22U-03-22790	• SHEET	3	SN: 350001-353110
17	206-03-21580	• SHEET	4	SN: 350001-353110
18	01010-81030	BOLT	2	SN: 350001-353110
19	01643-31032	WASHER	2	SN: 350001-353110
20	07040-11409	PLUG	1	SN: 350001-353110
21	07002-11423	O-RING	1	SN: 350001-353110
22	20Y-03-42670	NET	1	SN: 350001-353110
23	20Y-03-42710	NET	1	SN: 350001-353110
24	01434-10616	BOLT, WING	4	SN: 350001-353110
25	01643-30623	WASHER	4	SN: 350001-353110
		[C1] - PARTS WITH THIS SYMBOL CANNOT BE SUPPLIED SEPARATELY. SUPPLIED WITH ASSEMBLED PARTS.		SN: UP

Reference: C0100-005002

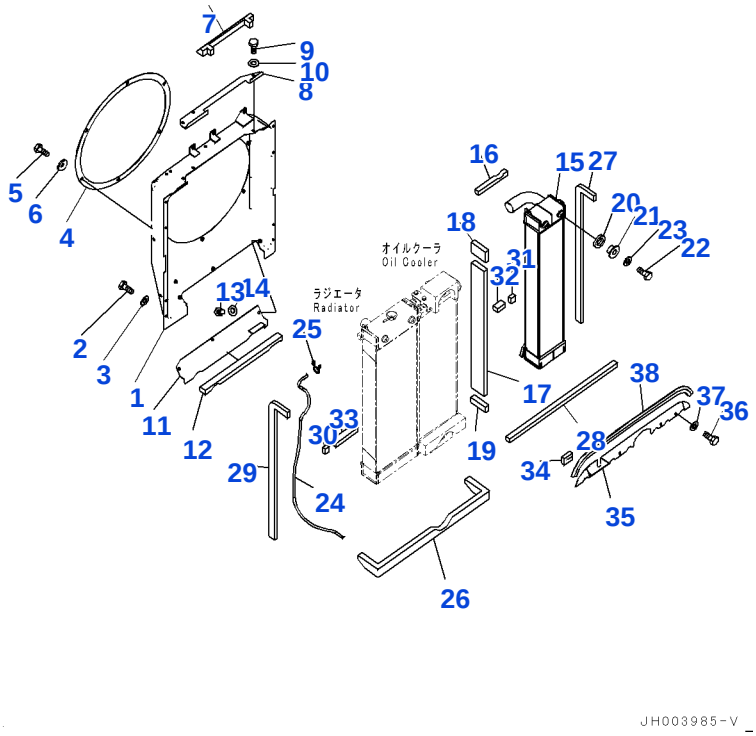

Reference: C0100-005003

C001003 Cooling device, aftertakura shroud (#350001-353110)

Item	Part No.	Part Name	Qty	Options
1	20Y-03-42471	SHROUD	1	SN: 350001-353110
2	01010-81020	BOLT	8	SN: 350001-353110
3	01643-31032	WASHER	8	SN: 350001-353110
4	20Y-03-41321	PLATE	1	SN: 350001-353110
5	01010-81020	BOLT	6	SN: 350001-353110
6	203-54-56970	WASHER	6	SN: 350001-353110
7	20Y-03-42210	SHEET	1	SN: 350001-353110
8	20Y-03-42190	COVER	1	SN: 350001-353110
9	01010-81020	BOLT	3	SN: 350001-353110
10	01643-31032	WASHER	3	SN: 350001-353110
11	20Y-03-42820	COVER	1	SN: 350001-353110
12	20Y-03-42830	SHEET	1	SN: 350001-353110
13	01010-81020	BOLT	3	SN: 350001-353110
14	01643-31032	WASHER	3	SN: 350001-353110
15	20Y-03-41131	AFTAQURAH	1	SN: 350001-353110
16	20Y-03-41491	SHEET	1	SN: 350001-353110
17	20Y-03-42260	SHEET	1	SN: 350001-353110
18	20Y-03-42160	SHEET	1	SN: 350001-353110
19	20Y-03-42290	SHEET	1	SN: 350001-353110
20	22U-03-22860	CUSHION	2	SN: 350001-353110
21	6738-61-4952	COLOR	2	SN: 350001-353110
22	01010-81030	BOLT	2	SN: 350001-353110
23	01643-31032	WASHER	2	SN: 350001-353110
24	20Y-03-42340	HOSE	1	SN: 350001-353110
25	206-03-43340	CLIP	1	SN: 350001-353110
26	20Y-03-41391	SHEET	1	SN: 350001-353110
27	206-03-21310	SHEET	1	SN: 350001-353110
28	206-03-21320	SHEET	1	SN: 350001-353110
29	206-03-21310	SHEET	1	SN: 350001-353110
30	206-03-21560	SHEET	1	SN: 350001-353110
31	206-03-21570	SHEET	1	SN: 350001-353110
32	20Y-03-41461	SHEET	1	SN: 350001-353110
33	20Y-03-41521	SHEET	1	SN: 350001-353110
34	20Y-03-41633	SHEET	1	SN: 350001-353110

Open this exact parts catalogue on K-Part

Item	Part No.	Part Name	Qty	Options
35	20Y-03-42721	COVER	1	SN: 350001-353110
36	01010-81020	BOLT	4	SN: 350001-353110
37	01643-31032	WASHER	4	SN: 350001-353110
38	20Y-03-41870	SEAL	1	SN: 350001-353110

Reference: C0100-005003

Open this exact parts catalogue on K-Part

Get the complete PDF catalogue

Komatsu PC210LC-8N1 (JPN) S/N 350001-UP (Japanese)

$89

with PayPal | Store cart: $99

Buy this PDF on Manuals Komatsu

Check the model, serial range and language before payment.

Download instructions are emailed after payment confirmation.

This free sample contains 10 catalogue pages.