CATERPILLAR FUSION

Z2E / SEBP5199

Contents

Section	Page
Basic engine	2

Open this catalogue on K-Part

289-9885 ARM GP-MATERIAL HANDLING

289-9885 ARM GP-MATERIAL HANDLING FOR USE WITH 950H, 962H, 966H AND 972H WHEEL LOADERS EQUIPPED WITH QUICK COUPLER

Drawing 1 of 1

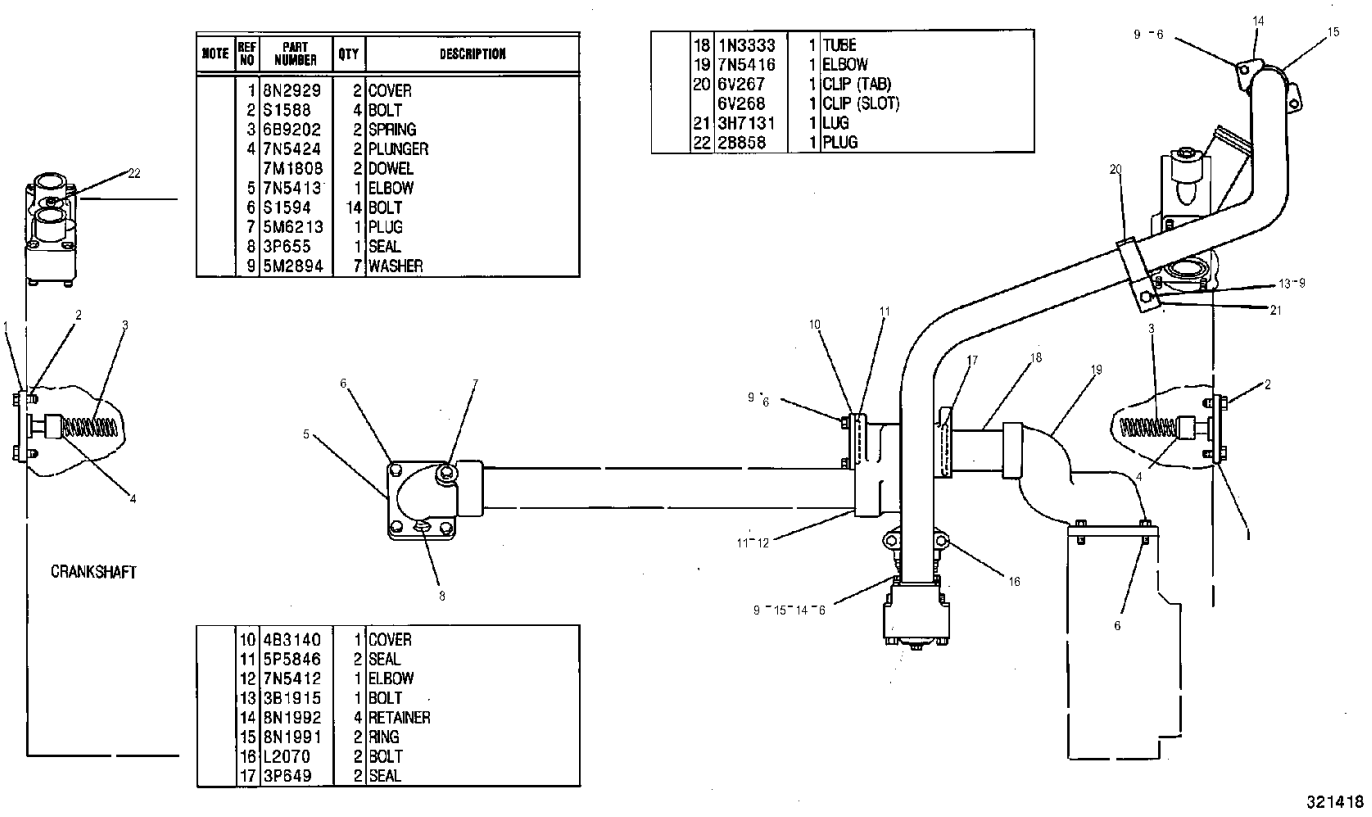

Ref.	Part number	Description	Qty.	Code	Group page
1	292-6390	ARM AS	1		
1A	2C-9259	PLATE-IDENTIFICATION (CAT)	2		
1B	172-8335	CHAIN	1		
2	159-8035	FILM-WARNING (CRUSH HAZARD, STAY BACK)	1		
3	159-8036	FILM-WARNING (READ OMM)	1		
4	203-7643	CLEVIS	1		
5	203-7644	HOOK AS	1		
5A	203-7730	KIT-LATCH	1		
6	222-2307	TUBE AS	1		
7	170-5707	LOCKPIN	1		
8	6R-1941	CONNECTOR	1		
9	3W-6116	PIN	1		
10	518-3003	FILM-WARNING (CRUSH HAZARD, READ OMM)(FOOT)	1		

Open this diagram on K-Part

289-9888 ARM GP-MATERIAL HANDLING

289-9888 ARM GP-MATERIAL HANDLING FOR USE WITH 930G AND 938H WHEEL LOADERS EQUIPPED WITH QUICK COUPLER

Drawing 1 of 1

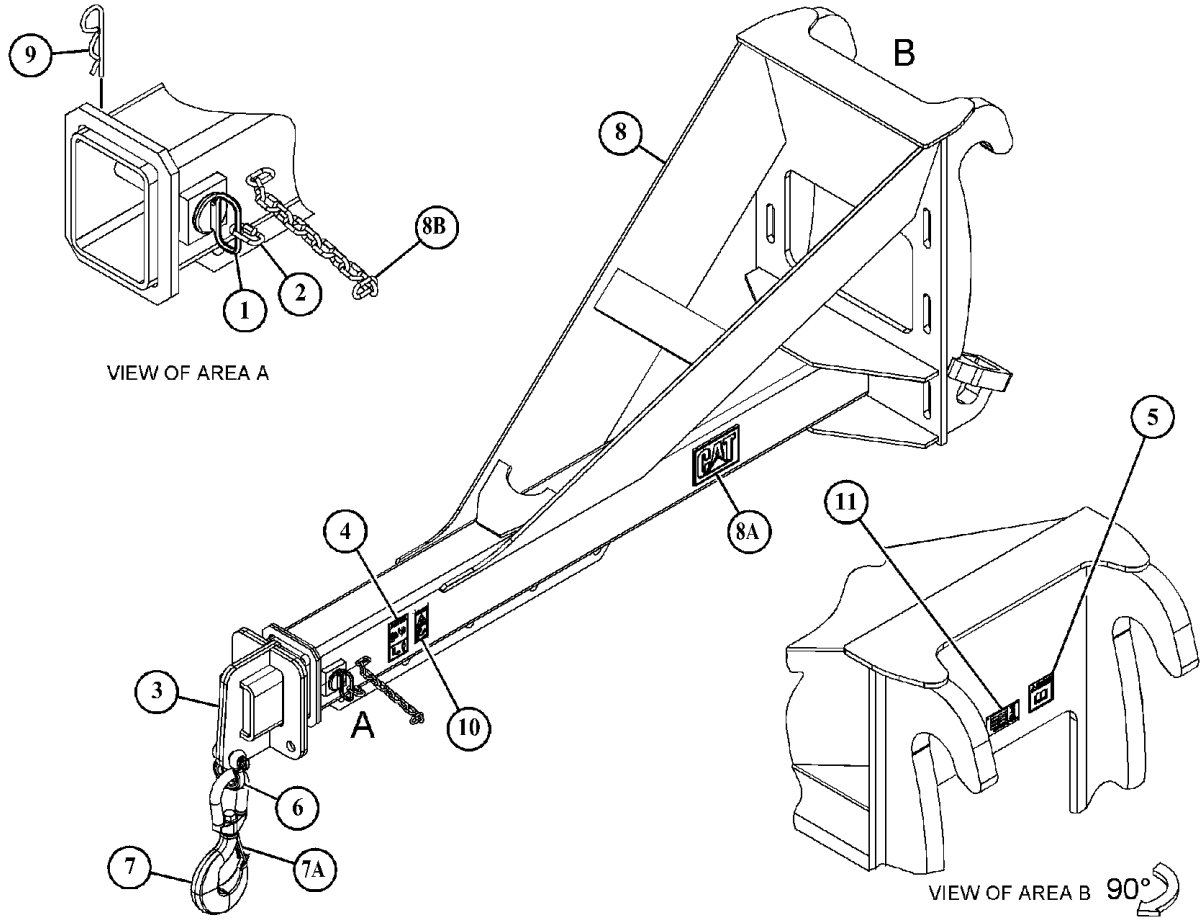

Ref.	Part number	Description	Qty.	Code	Group page
1	3W-6116	PIN	1		
2	6R-1941	CONNECTOR	1		
3	127-1678	EXTENSION AS	1		
4	159-8035	FILM-WARNING (CRUSH HAZARD, STAY BACK)	1		
5	159-8036	FILM-WARNING (READ OMM)	1		
6	203-7643	CLEVIS	1		
7	203-7644	HOOK AS	1		
7A	203-7730	KIT-LATCH (HOOK)	1		
8	293-4494	ARM AS	1		
8A	2C-9259	PLATE-IDENTIFICATION (CAT)	2		
8B	172-8335	CHAIN	1		

Open this diagram on K-Part

289-9888 ARM GP-MATERIAL HANDLING (continued)

Ref.	Part number	Description	Qty.	Code	Group page
9	170-5707	LOCKPIN	1		
10	518-3003	FILM-WARNING (CRUSH HAZARD, READ OMM)(FOOT CRUSHING HAZARD)	1		
11	180-3516	PLATE-IDENTIFICATION (MATERIAL HANDLING)	1		

529-6555 ARM GP-MATERIAL HANDLING

529-6555 ARM GP-MATERIAL HANDLING FOR USE WITH 980K AND 980M WHEEL LOADERS EQUIPPED WITH QUICK COUPLER

Drawing 1 of 1

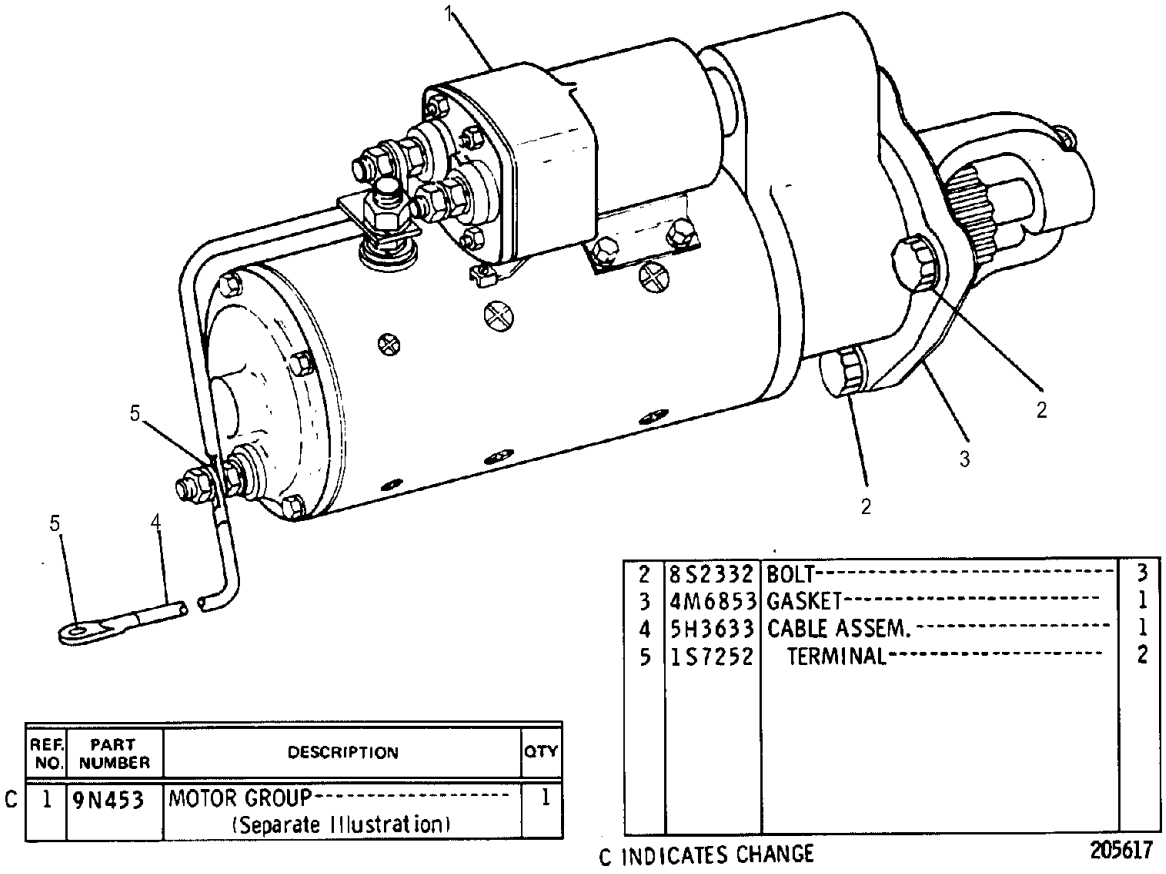

Ref.	Part number	Description	Qty.	Code	Group page
1	3W-6116	PIN	1		
2	6R-1941	CONNECTOR	1		
3	159-8035	FILM-WARNING (CRUSH HAZARD, STAY BACK)	2		
4	159-8036	FILM-WARNING (READ OMM)	1		
5	358-4945	PLATE-IDENTIFICATION (WORK TOOL)	1		
6	530-2498	HOOK AS	1		
6A	203-7730	KIT-LATCH	1		
7	529-7342	TUBE AS	1		
8	530-2484	SHACKLE	1		
9	170-5707	LOCKPIN	1		
10	529-6627	ARM AS	1		
10A	2C-9259	PLATE-IDENTIFICATION (CAT)	2		
10B	172-8335	CHAIN	1		

MANUALS-KOMATSU.COM

Complete Caterpillar PDF Parts Catalogue

Z2E-SEBP5199

$99

Buy on this catalogue page in our store.

Download instructions are sent after payment confirmation.

Buy complete PDF - $99

Open this catalogue on K-Part