CATERPILLAR PIN GRAB

XXE / SEBP3806

Contents

Section	Page
Basic engine	2
Basic engine	5

236-2224 COUPLER GP-QUICK

236-2224 COUPLER GP-QUICK S/N XXE1-UP PART OF 276-3221 COUPLER AR-QUICK FOR USE WITH 320C/D EXCAVATOR WITH STANDARD STICK LINKAGE

Drawing 1 of 1

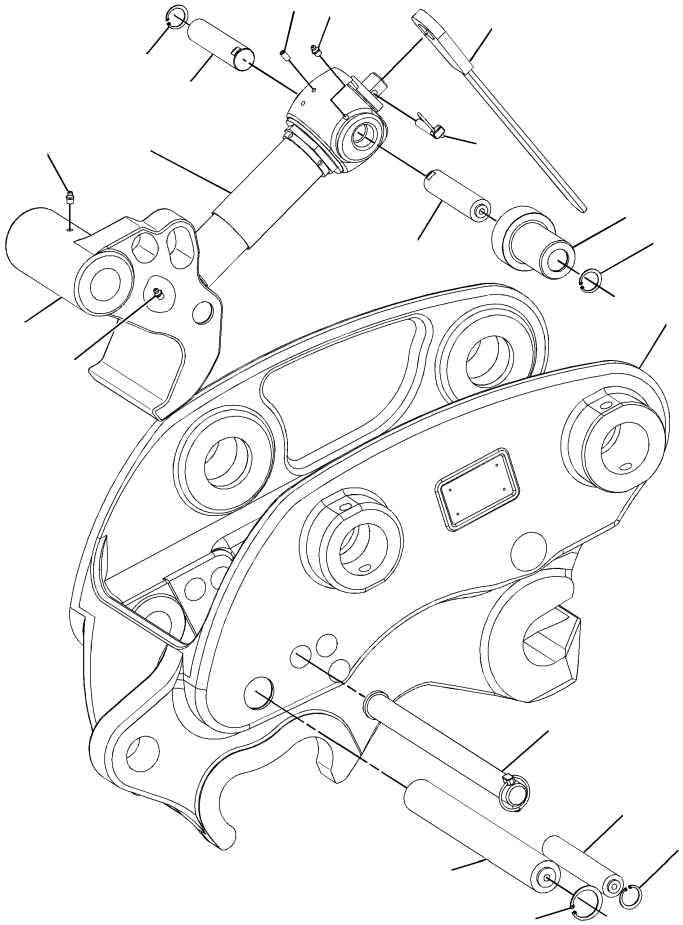

Ref.	Part number	Description	Qty.	Code	Group page
1	274-1211	CYLINDER GP-COUPLER	1		
	321-4367	PLATE-LOCK	1		
2	274-1215	HOOK	1		
3	274-1216	PIN	2		
4	273-4163	PIN	1		
5	273-4160	PIN	1		
6	274-1218	PIN	1		
7	249-8710	PIN	2		
8	091-5928	FITTING-GREASE	3		
9	242-8938	SCREW	2		
10	274-1219	INSERT	1		
11	256-9808	CLIP	2		

236-2224 COUPLER GP-QUICK (continued)

Ref.	Part number	Description	Qty.	Code	Group page
12	256-9807	CLIP	4		
13	274-3402	RATCHET	1		
Z					

CAT codes: Z.

172-8444 PIN GP-COUPLER

172-8444 PIN GP-COUPLER S/N XXE1-UP FOR USE WITH EXCAVATOR WITH "S" OR "B" LINKAGE AN ATTACHMENT

Drawing 1 of 1

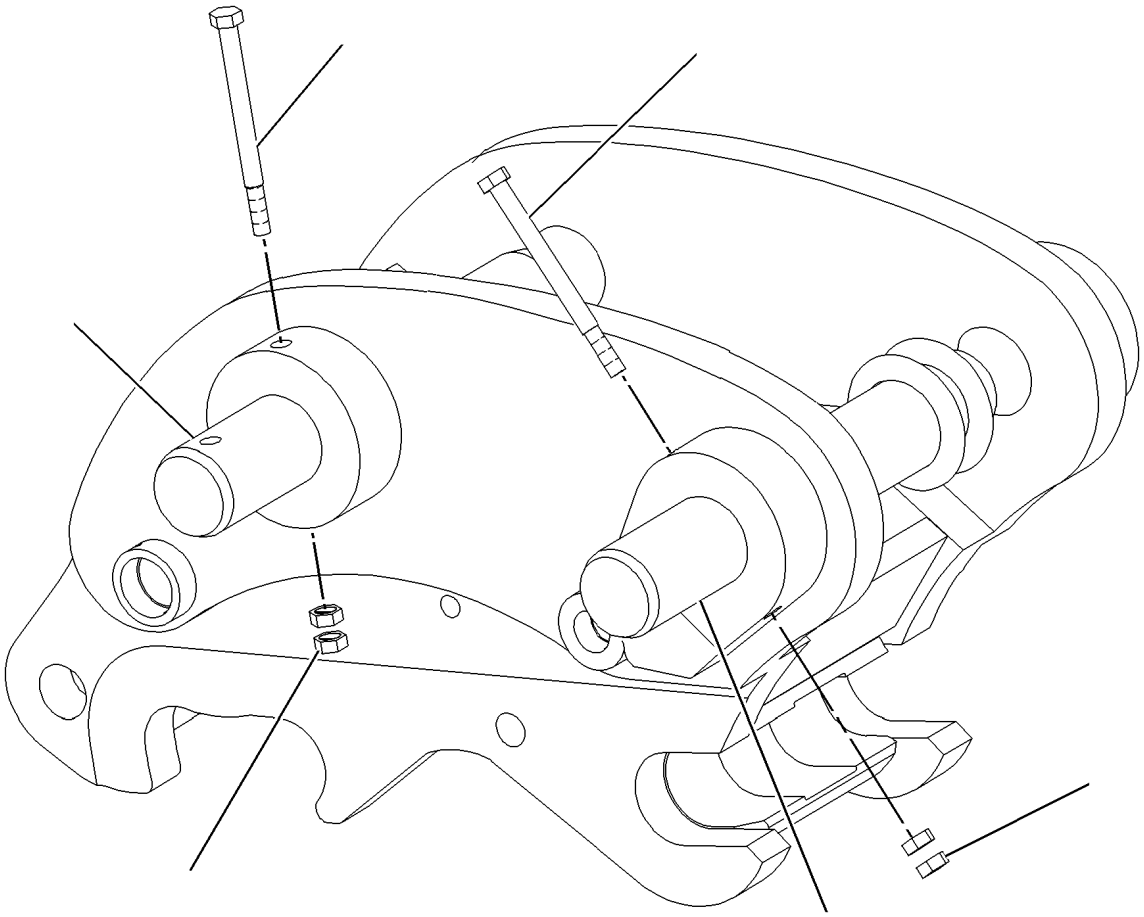

Ref.	Part number	Description	Qty.	Code	Group page
1	7Y-5227	BOLT (M16X2X190-MM)	2	M	
2	8T-4132	NUT (M16X2-THD)	4	M	
3	087-5805	PIN	2		

CAT codes: M.

276-3221 COUPLER AR-QUICK

276-3221 COUPLER AR-QUICK S/N XXE1-UP FOR USE WITH 320C/D EXCAVATOR WITH STANDARD STICK LINKAGE

Arrangement composition. Follow the table links to the component drawings.

Ref.	Part number	Description	Qty.	Code	Group page
	236-2224	COUPLER GP-QUICK	1	Y	2
	292-9231	FILM-INSTRUCTION (COUPLER OPERATION)	1		
	268-4530	FILM-WARNING (CRUSH HAZARD, READ OMM, U.S.)	1		
	268-8872	FILM-WARNING (CRUSH HAZARD, READ OMM, U.S.)	1		
	160-8290	SHIM (1-MM THK)	2		

CAT codes: Y.

MANUALS-KOMATSU.COM

Complete Caterpillar PDF Parts Catalogue

XXE-SEBP3806

$99

Buy on this catalogue page in our store.

Download instructions are sent after payment confirmation.

Buy complete PDF - $99

Open this catalogue on K-Part