CATERPILLAR 3208

51Z / SEBP1307

Contents

Section	Page
Lubrication system	2
Cooling system	
Air inlet and exhaust	
Fuel system	
Electrical and electronics	
Basic engine	
Basic engine	
Basic engine	

Open this catalogue on K-Part

9N-6162 GAUGE GP-OIL LEVEL (DIPSTICK)

9N6162 OIL LEVEL GAUGE GROUP-REAR SUMP

Drawing 1 of 1

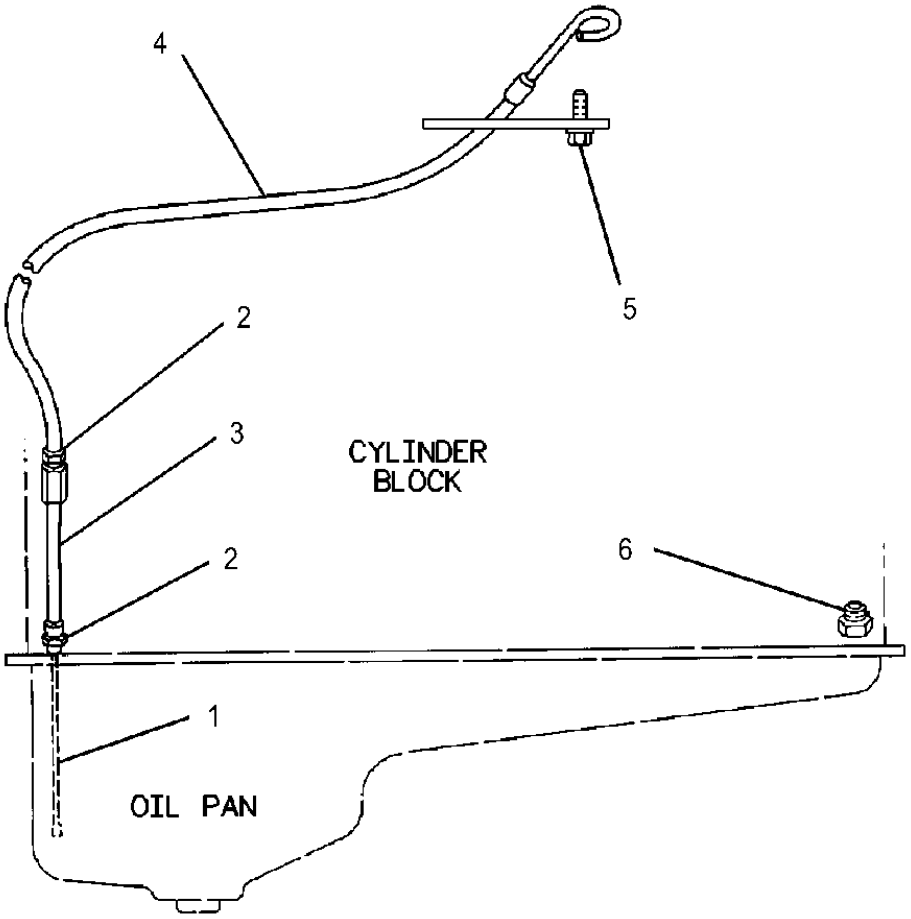

Ref.	Part number	Description	Qty.	Code	Group page
1	9N-6650	GAUGE-OIL LEVEL	1		
2	8F-8997	NUT-FITTING	2		
3	9L-9056	GUIDE AS-GAUGE	1		
4	7W-5661	GUIDE AS-GAUGE	1		
5	2B-2695	BOLT	1		
	9M-1974	WASHER	1		
6	1S-2563	PLUG	1		

Open this diagram on K-Part

9N-6168 GAUGE GP-OIL LEVEL (DIPSTICK)

9N6168 OIL LEVEL GAUGE GROUP-FRONT SUMP

Drawing 1 of 1

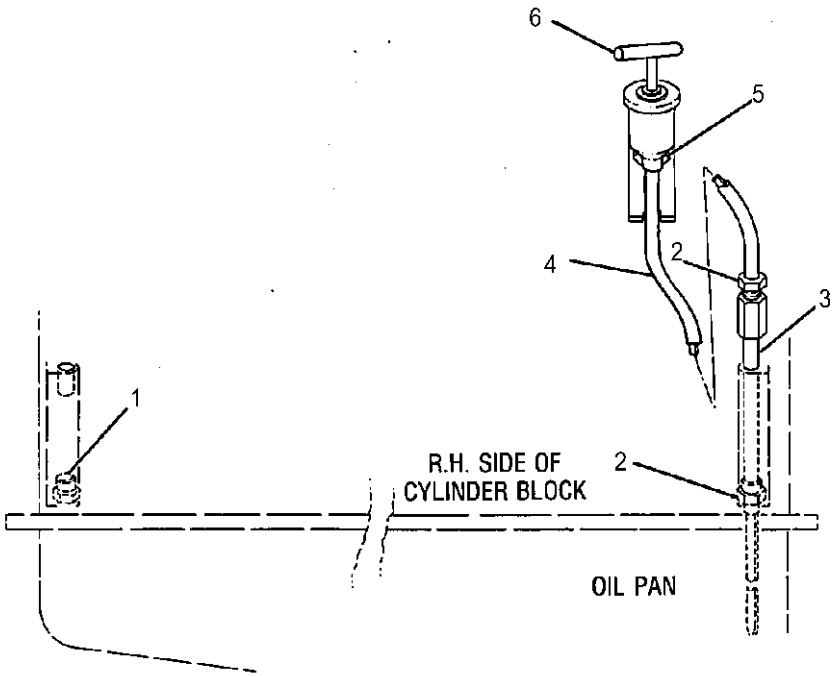

Ref.	Part number	Description	Qty.	Code	Group page
1	1S-2563	PLUG	1		
2	8F-8997	NUT-FITTING	2		
3	9L-9056	GUIDE AS-GAUGE	1		
4	4W-9123	GUIDE AS-GAUGE	1	C	
5	3L-0526	BOLT	1		
	4S-9191	WASHER	1		
6	9N-6651	GAUGE-OIL LEVEL	1		

CAT codes: C.

Open this diagram on K-Part

7C-5795 GAUGE-OIL LEVEL (DIPSTICK)

7C5795 GAUGE-OIL LEVEL FIELD INSTALLATION

Drawing 1 of 1

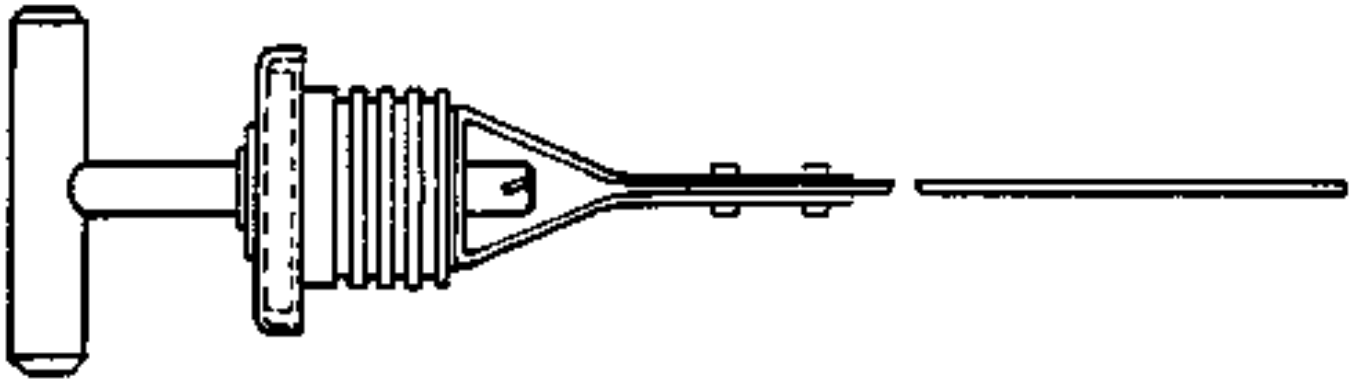

Ref.	Part number	Description	Qty.	Code	Group page
NO SERVICEABLE PARTS					

Open this diagram on K-Part

4W-4255 GAUGE GP-OIL LEVEL (DIPSTICK)

4W4255 OIL LEVEL GAUGE GROUP

Drawing 1 of 1

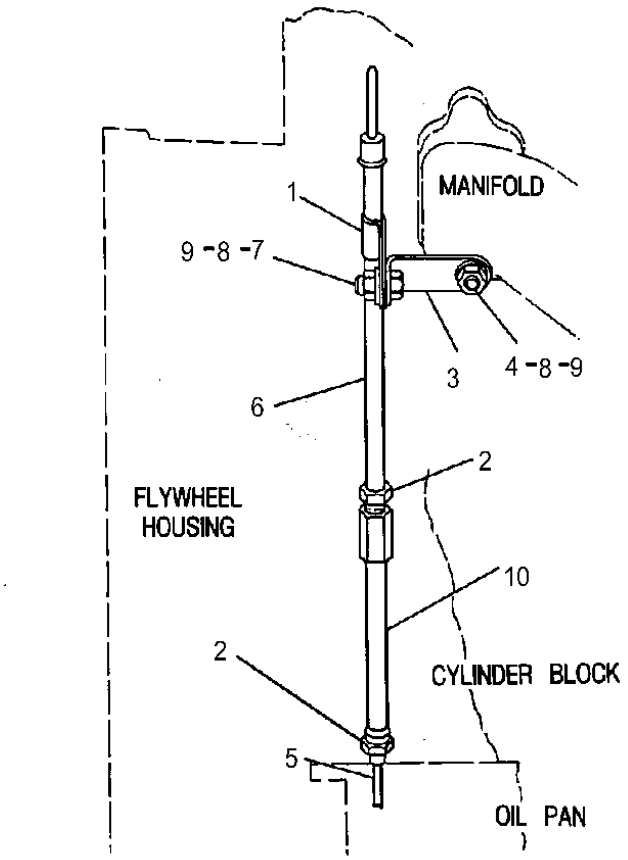

Ref.	Part number	Description	Qty.	Code	Group page
1	7M-2220	CLIP	1		
2	8F-8997	NUT-FITTING	2		
3	9L-6331	BRACKET	1		
4	9L-9115	STUDBOLT	1		
5	4W-4254	GAUGE-OIL LEVEL	1		
6	6N-0114	GUIDE-OIL GAUGE	1		
7	0L-1351	BOLT	1		
8	1D-4717	NUT	2		
9	5M-2894	WASHER	3		
10	9L-9056	GUIDE AS-GAUGE	1		

Open this diagram on K-Part

1W-2206 PUMP GP-ENGINE OIL

1W2206 OIL PUMP GROUP-WITHOUT HOUSING SERIAL NO. 32Y68441 TO 32Y99999 & 51Z1 TO 51Z27829 INCLUSIVE

Drawing 1 of 1

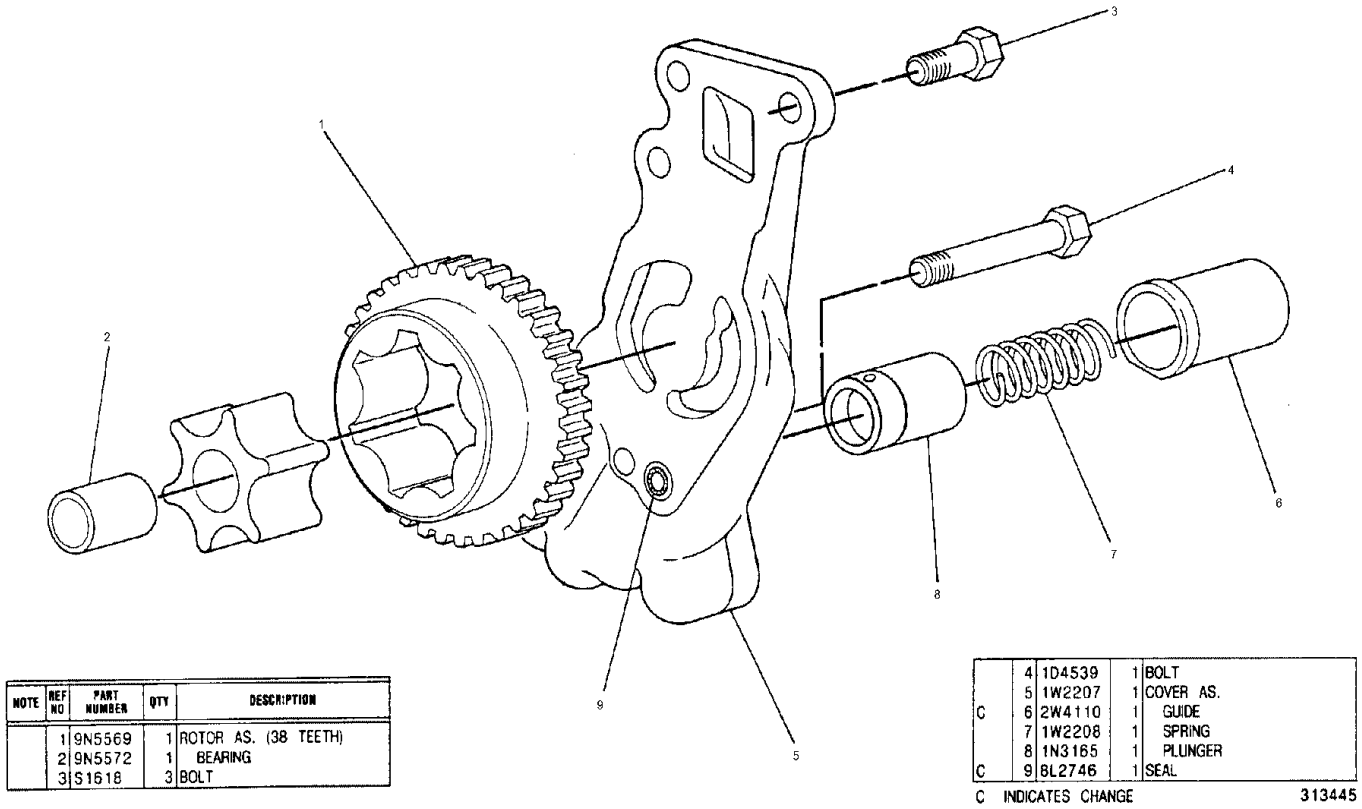

NOTE	REF NO	PART NUMBER	QTY	DESCRIPTION
	1	9N5569	1	ROTOR AS. (38 TEETH)
	2	9N5572	1	BEARING
	3	S1618	3	BOLT
	4	1D4539	1	BOLT
	5	1W2207	1	COVER AS.
C	6	2W4110	1	GUIDE
	7	1W2208	1	SPRING
	8	1N3165	1	PLUNGER
C	9	8L2746	1	SEAL

C INDICATES CHANGE 313445

Ref.	Part number	Description	Qty.	Code	Group page
1	9N-5569	ROTOR AS. (38 TEETH)	1		
2	9N-5572	BEARING	1		
3	0S-1618	BOLT	3		
4	1D-4539	BOLT	1		
5	1W-2207	COVER AS.	1		
6	2W-4110	GUIDE	1	C	
7	1W-2208	SPRING	1		
8	1N-3165	PLUNGER	1		
9	8L-2746	SEAL	1	C	

CAT codes: C.

1W-2206 PUMP GP-ENGINE OIL

1W2206 OIL PUMP GROUP-WITHOUT HOUSING SERIAL NO. 51Z27830-UP

Drawing 1 of 1

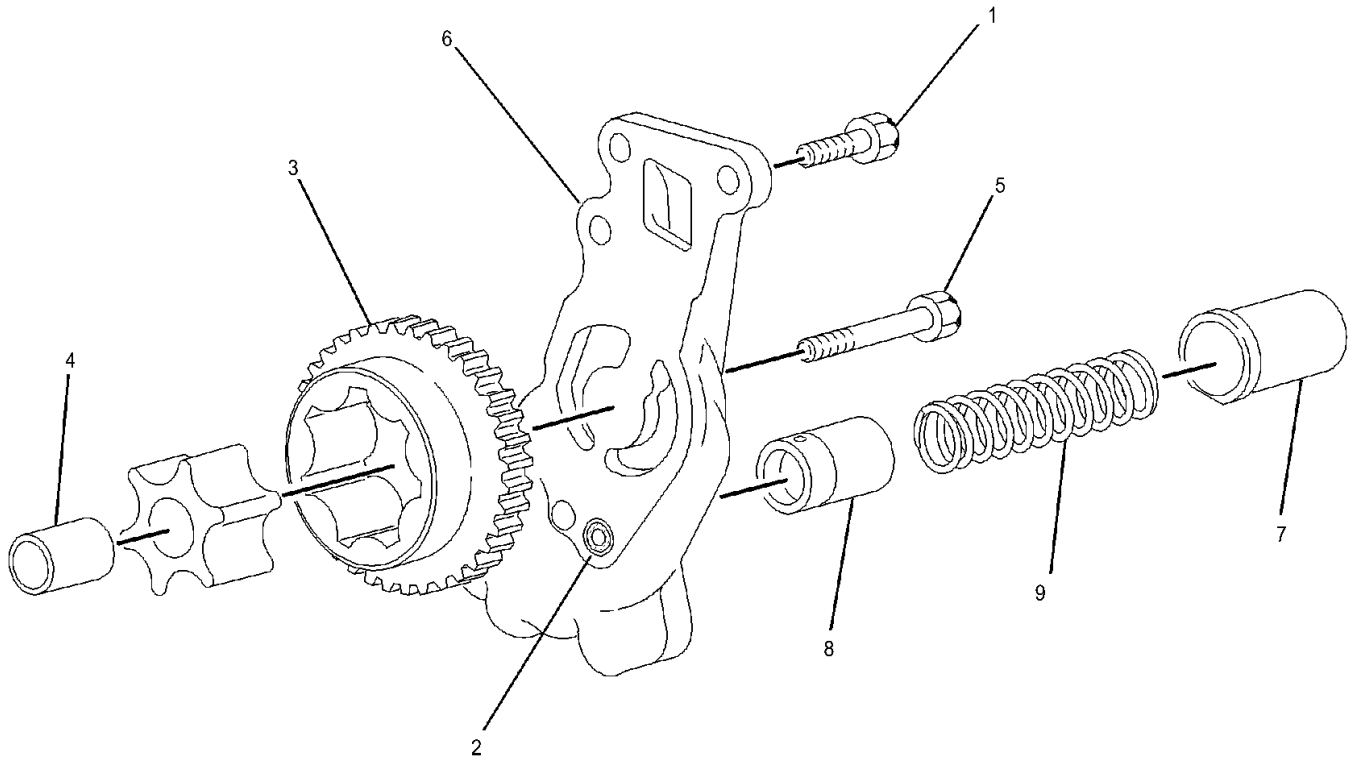

Ref.	Part number	Description	Qty.	Code	Group page
1	0S-1618	BOLT	3		
2	8L-2746	SEAL-O-RING	1		
3	9N-5569	ROTOR AS-PUMP	1		
4	9N-5572	BEARING-SLEEVE	1		
5	1D-4539	BOLT	1		
6	1W-2207	COVER AS-OIL PUMP	1		
7	2W-4110	GUIDE	1	C	
8	1N-3165	PLUNGER-RELIEF VALVE	1		
9	1W-2208	SPRING	1		

CAT codes: C.

Open this diagram on K-Part

9N-6336 LINES GP-ENGINE OIL

9N6336 OIL LINES GROUP-REAR SUMP SERIAL NO. 32Y68441 TO 32Y76969 INCLUSIVE

Drawing 1 of 1

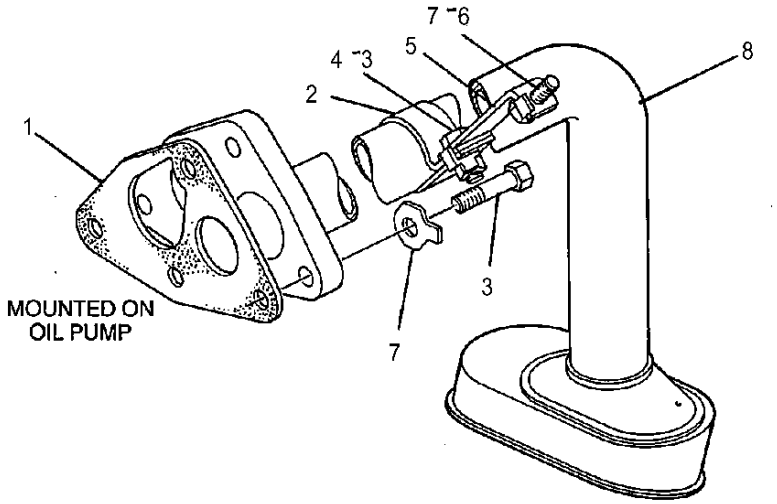

Ref.	Part number	Description	Qty.	Code	Group page
1	9N-0241	GASKET (OIL PUMP INLET)	1		
2	9N-6629	CLIP	1		
3	0S-1617	BOLT	5		
4	1D-4716	NUT-FULL	1		
	9L-9470	LOCK	1		
5	9N-6595	SUPPORT-SUCTION BELL	1		
6	1A-9136	BOLT	1		
7	2A-5328	LOCK	5		
8	9N-6630	BELL AS (OIL PUMP SUCTION)	1		

Open this diagram on K-Part

9N-6334 LINES GP-ENGINE OIL

9N6334 OIL LINES GROUP-FRONT SUMP SERIAL NO. 32Y68441 TO 32Y76969 INCLUSIVE

Drawing 1 of 1

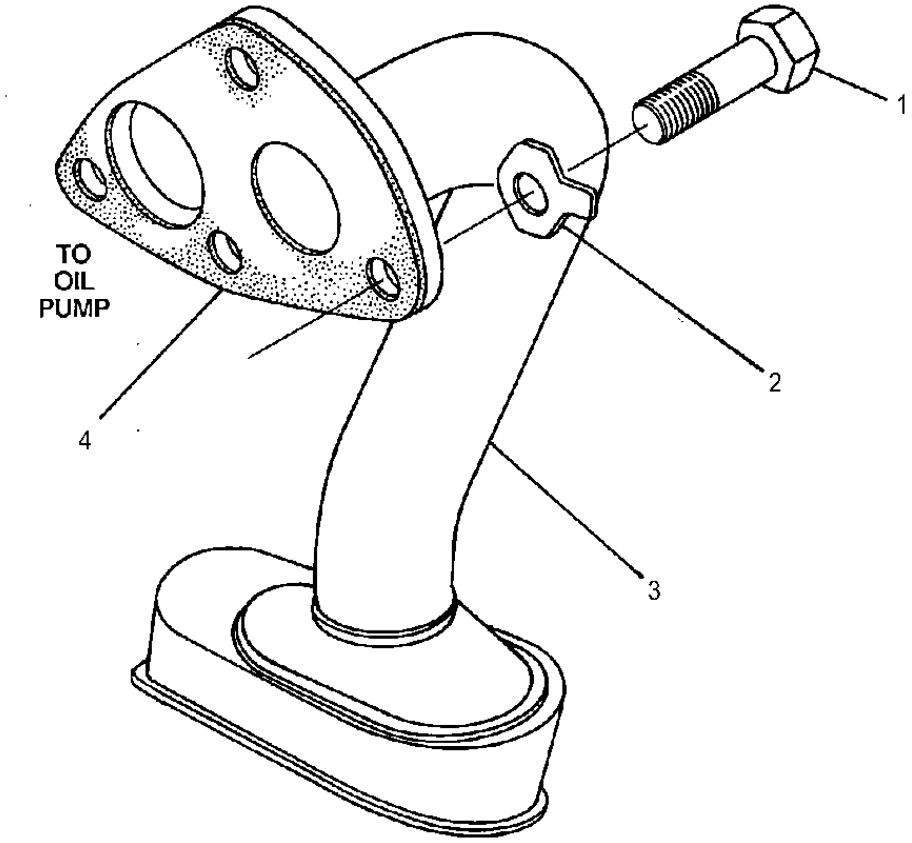

Ref.	Part number	Description	Qty.	Code	Group page
1	0S-1617	BOLT	4		
2	2A-5328	LOCK	4		
3	9N-6529	BELL AS-PUMP SUCTION	1		
4	9N-0241	GASKET	1		

Open this diagram on K-Part

9N-6336 LINES GP-ENGINE OIL

9N6336 OIL LINES GROUP-REAR SUMP SERIAL NO. 32Y76970 TO 32Y99999 AND 51Z1 TO 51Z27829 INCLUSIVE

Drawing 1 of 1

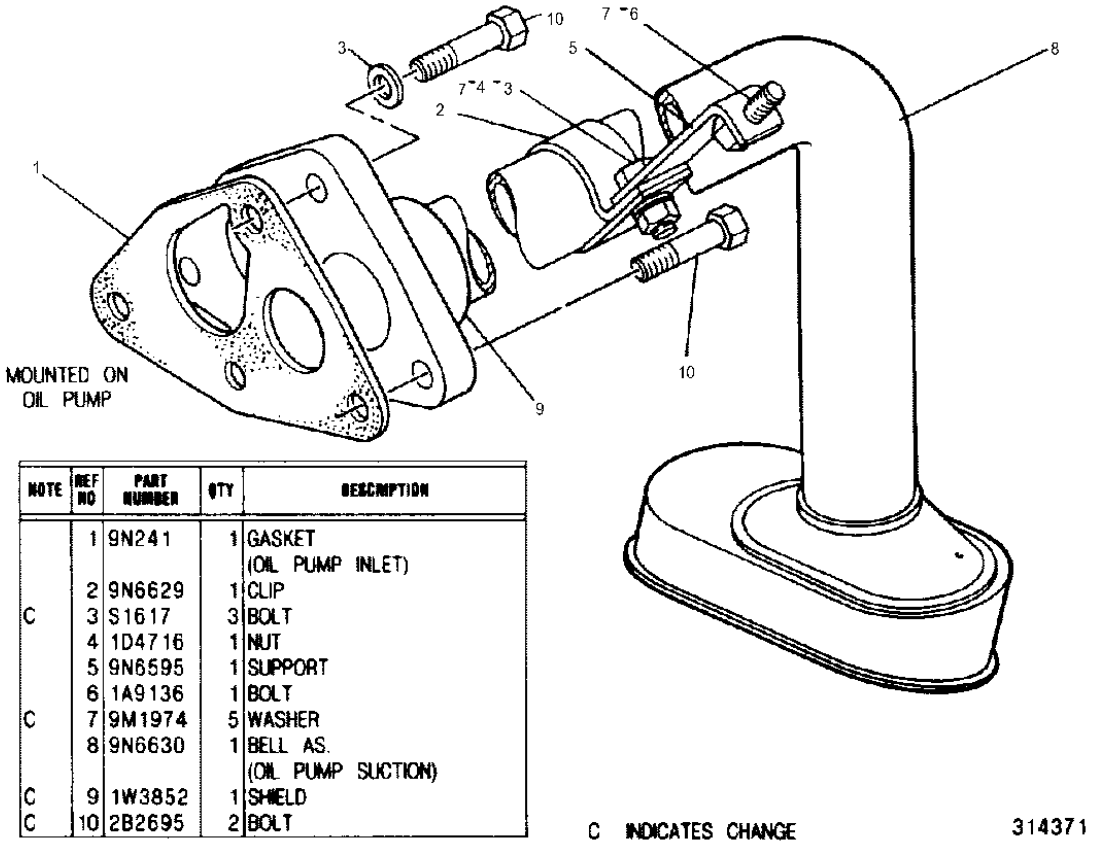

NOTE	REF NO	PART NUMBER	QTY	DESCRIPTION
	1	9N241	1	GASKET (OIL PUMP INLET)
	2	9N6629	1	CLIP
C	3	S1617	3	BOLT
	4	1D4716	1	NUT
	5	9N6595	1	SUPPORT
	6	1A9136	1	BOLT
C	7	9M1974	5	WASHER
	8	9N6630	1	BELL AS. (OIL PUMP SUCTION)
C	9	1W3852	1	SHIELD
C	10	2B2695	2	BOLT

Ref.	Part number	Description	Qty.	Code	Group page
1	9N-0241	GASKET	1		
(OIL PUMP INLET)					
2	9N-6629	CLIP	1		
3	0S-1617	BOLT	3	C	
4	1D-4716	NUT	1		
5	9N-6595	SUPPORT	1		
6	1A-9136	BOLT	1		
7	9M-1974	WASHER	5	C	
8	9N-6630	BELL AS.	1		
(OIL PUMP SUCTION)					
9	1W-3852	SHIELD	1	C	
10	2B-2695	BOLT	2	C	

CAT codes: C.

Open this diagram on K-Part

MANUALS-KOMATSU.COM

Complete Caterpillar PDF Parts Catalogue

51Z-SEBP1307

$99

Buy on this catalogue page in our store.

Download instructions are sent after payment confirmation.

Buy complete PDF - $99

Open this catalogue on K-Part