CATERPILLAR 345B L

2SW / SEBP7105

Contents

Section	Page
Basic engine	2
Lubrication system	
Cooling system	
Fuel system	
Fuel system	
Basic engine	
Basic engine	
Electrical and electronics	
Power train	

Open this catalogue on K-Part

104-7995 BASE GP-OIL FILTER

104-7995 BASE GP-OIL FILTER S/N 7ZR1-UP PART OF 185-8764 FILTER GP-ENGINE OIL

Drawing 1 of 1

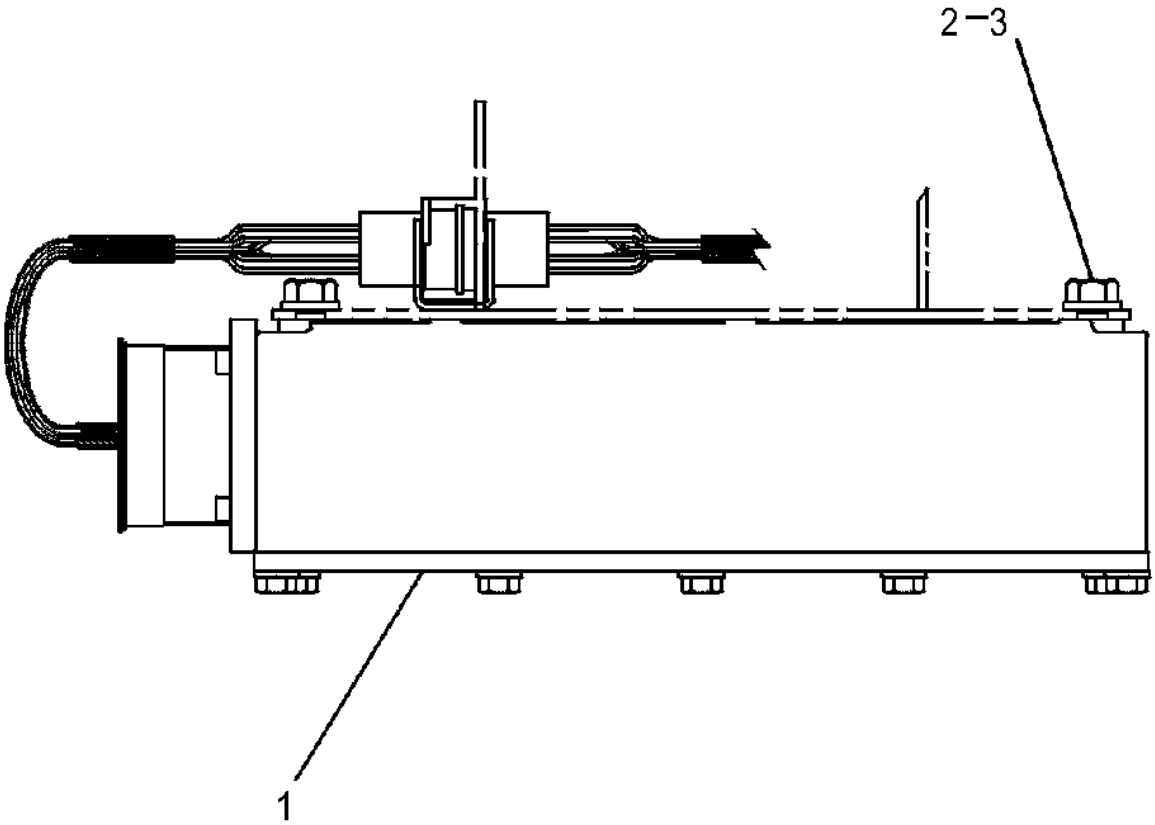

Ref.	Part number	Description	Qty.	Code	Group page
1	2P-4304	STUD-HOLLOW	1		

122-0725 BASE GP-OIL FILTER

122-0725 BASE GP-OIL FILTER S/N 7ZR1-UP PART OF 144-6648 FILTER GP-ENGINE OIL

Drawing 1 of 1

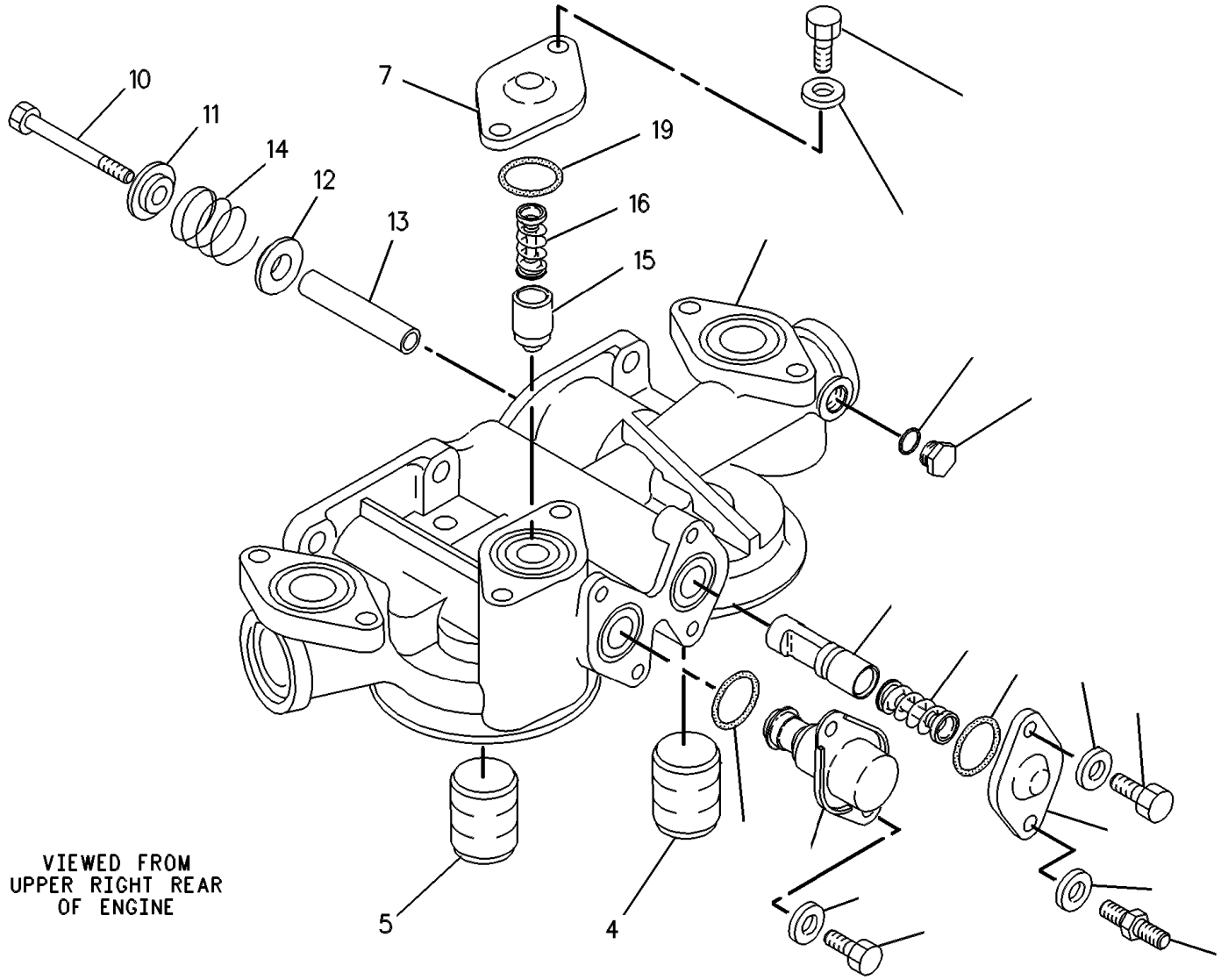

Ref.	Part number	Description	Qty.	Code	Group page
1	6V-5217	BOLT (M8X1.25X20-MM)	2	M	
2	9M-1974	WASHER-HARD (8.8X16X2-MM THK)	6		
3	122-0726	BASE AS-OIL FILTER	1		
	3B-0623	PLUG-CUP	1		
	3P-1896	PLUG-CUP (35.31-MM OD)	2		
4	7W-6390	STUD-FILTER BASE	1		
5	2P-4304	STUD-HOLLOW	1		
6	6V-3940	BOLT (M8X1.25X25-MM)	3	M	
7	7C-2891	COVER	2		
8	7C-3954	SPRING AS	1		
	2N-6005	SPRING	1		

Open this diagram on K-Part

122-0725 BASE GP-OIL FILTER (continued)

Ref.	Part number	Description	Qty.	Code	Group page
9	111-2645	VALVE-PUMP BYPASS	1		
10	6V-8359	BOLT (M6X1X70-MM)	1	M	
11	7C-3083	SEAT-RELIEF VALVE SPRING	1		
12	7C-3082	RETAINER	1		
13	7C-3081	SPACER (6.88X9.53X50-MM THK)	1		
14	1A-2170	SPRING-RETAINER	1		
15	9M-0853	PLUNGER-VALVE	1		
16	7C-3953	SPRING AS	1		
	8M-3182	SPRING	1		
17	9S-4185	PLUG (3/4-16-THD)	1		
18	8L-2786	SEAL-O-RING	1		
19	6V-4367	SEAL-O-RING	3		
20	9Y-3902	VALVE (OIL PRESSURE TEMP)	1		
21	9X-2097	STUD (M8X1.25-THD)	1	M	

CAT codes: M.

166-1329 BASE GP-OIL FILTER -ENGINE

166-1329 BASE GP-OIL FILTER -ENGINE S/N 7ZR1-UP PART OF 185-8764 FILTER GP-ENGINE OIL

Drawing unavailable in the current source. The parts list is preserved below.

Ref.	Part number	Description	Qty.	Code	Group page
1	9M-1974	WASHER-HARD (8.8X16X2-MM THK)	6		
2	166-1328	BASE AS	1		
2A	2P-4304	STUD-HOLLOW	1		
2B	3B-0623	PLUG-CUP	1		
2C	3P-1896	PLUG-CUP (35.31-MM OD)	2		
2D	7W-6390	STUD-FILTER BASE	1		
3	6V-4367	SEAL-O-RING	3		
4	6V-3940	BOLT (M8X1.25X25-MM)	3	M	
5	7C-2891	COVER	3		
6	7C-3954	SPRING AS	1		
6A	2N-6005	SPRING	1		
7	111-2645	VALVE-PUMP BYPASS (ENGINE OIL FILTER)	1		
8	6V-8359	BOLT (M6X1X70-MM)	1	M	
9	7C-3083	SEAT-RELIEF VALVE SPRING	1		
10	7C-3082	RETAINER	1		
11	7C-3081	SPACER (6.88X9.53X50-MM THK)	1		
12	1A-2170	SPRING-RETAINER	1		
13	392-9208	PLUNGER-VALVE (RELIEF)	2	C	
14	288-3803	SPRING AS	2		
(EACH INCLUDES)					
14A	4N-8150	SPRING	1		
15	398-5596	PLUG AS	1	C	
	238-5080	SEAL-O-RING	1		
	360-3680	PLUG	1		
17	9X-2097	STUD (M8X1.25-THD)	3	M	

CAT codes: C, M.

532-8902 BASE GP-OIL FILTER

532-8902 BASE GP-OIL FILTER S/N 7ZR1-UP PART OF 185-8764 FILTER GP-ENGINE OIL

Drawing 1 of 1

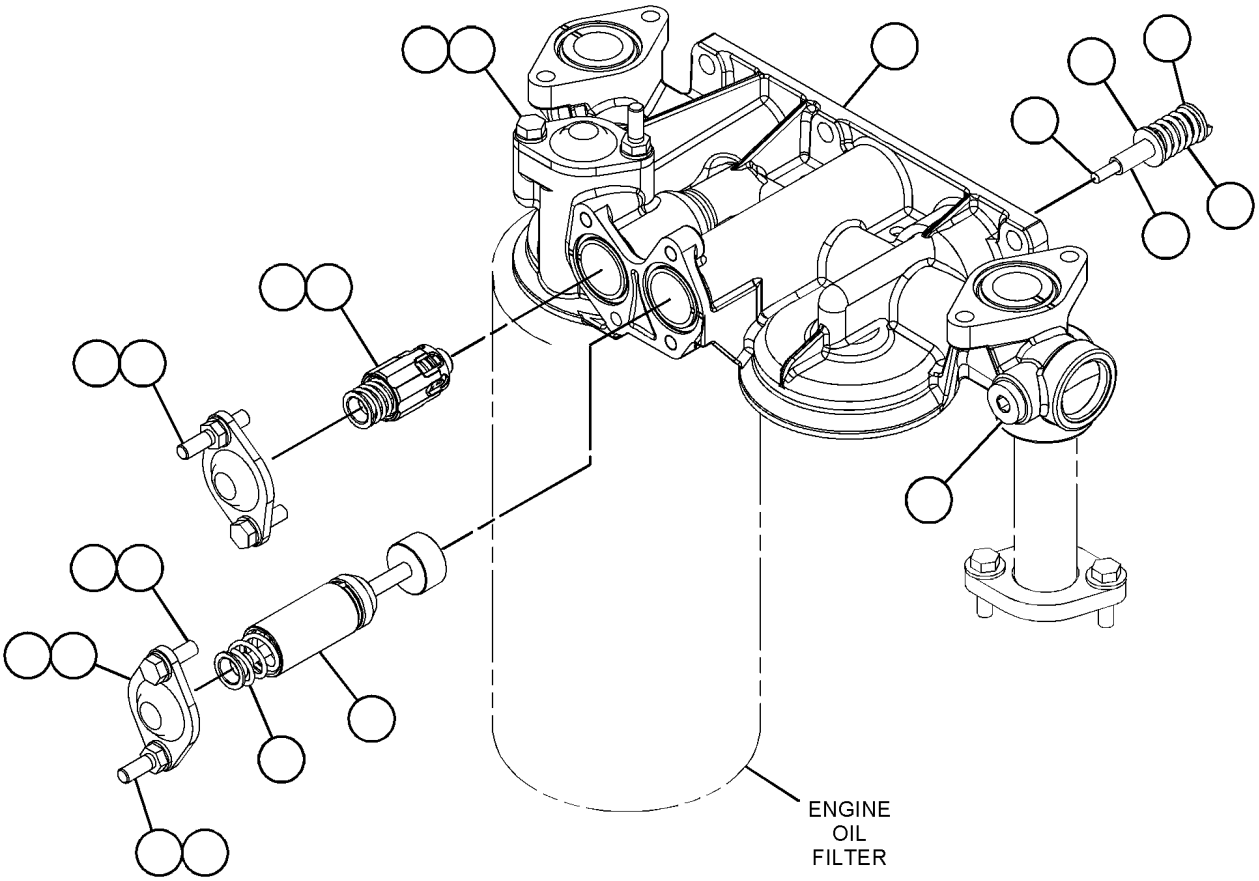

Ref.	Part number	Description	Qty.	Code	Group page
1	7C-2891	COVER	3		
2	7C-3081	SPACER (6.88X9.53X50-MM THK)	1		
3	7C-3082	RETAINER	1		
4	7C-3083	SEAT-RELIEF VALVE SPRING	1		
5	7C-3954	SPRING AS	1		
6	111-2645	VALVE-PUMP BYPASS (ENGINE OIL FILTER)	1		
7	166-1328	BASE AS	1		
	2P-4304	STUD-HOLLOW	1		
	3B-0623	PLUG-CUP	1		
	3P-1896	PLUG-CUP (35.31-MM OD)	2		
	7W-6390	STUD-FILTER BASE	1		
8	288-3803	SPRING AS	2		
9	392-9208	PLUNGER-VALVE (RELIEF)	2		
10	398-5596	PLUG AS	1		
	238-5080	SEAL-O-RING	1		

532-8902 BASE GP-OIL FILTER (continued)

Ref.	Part number	Description	Qty.	Code	Group page
	360-3680	PLUG	1		
11	368-3986	SPRING	1		
12	6V-3940	BOLT (M8X1.25X25-MM)	3	M	
13	6V-4367	SEAL-O-RING	3		
14	6V-8359	BOLT (M6X1X70-MM)	1	M	
15	9M-1974	WASHER-HARD (8.8X16X2-MM THK)	6		
16	9X-2097	STUD (M8X1.25-THD)	3	M	

CAT codes: M.

117-2786 COVER GP-OIL FILTER BASE -ENGINE

117-2786 COVER GP-OIL FILTER BASE -ENGINE S/N 7ZR1-UP FOR USE WITH 115-2985, ENGINE OIL FILTER BASE WHEN NO BYPASS FILTER IS USED

Drawing 1 of 1

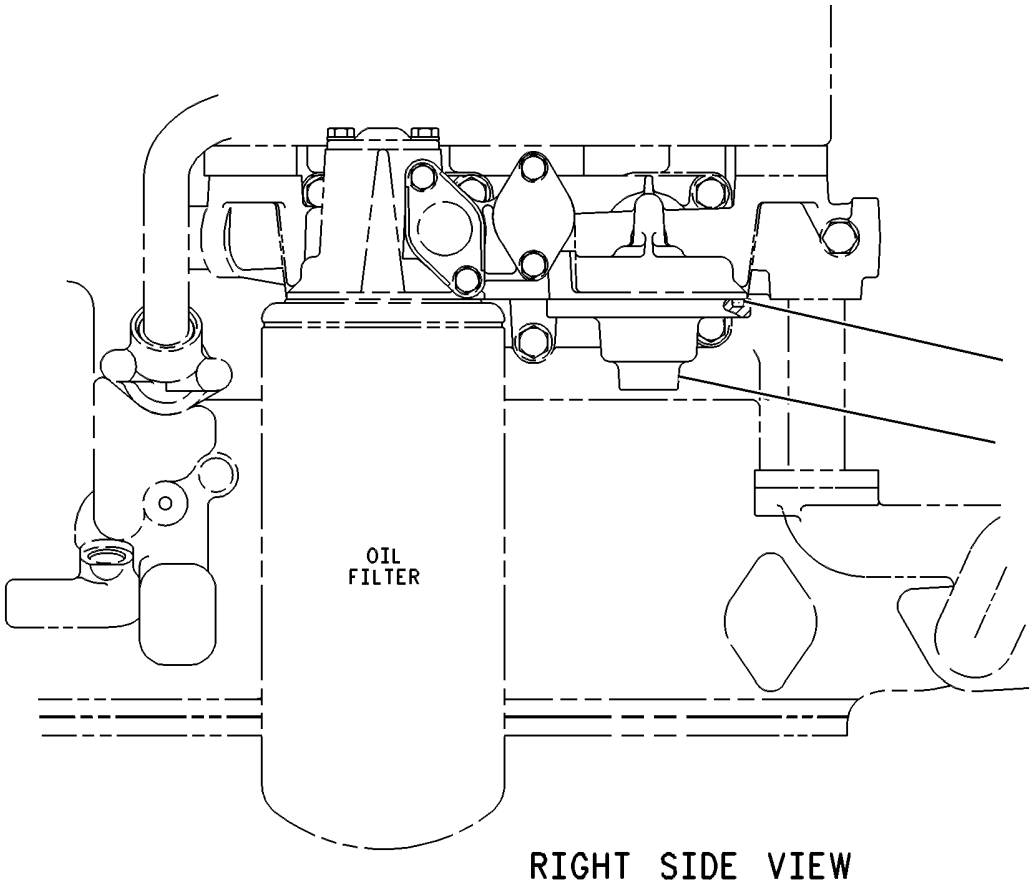

Ref.	Part number	Description	Qty.	Code	Group page
1	7C-9542	COVER-FILTER BASE	1		
2	5S-9134	SEAL-O-RING	1		

133-7003 FILLER GP-ENGINE OIL

133-7003 FILLER GP-ENGINE OIL S/N 7ZR1-UP

Drawing 1 of 1

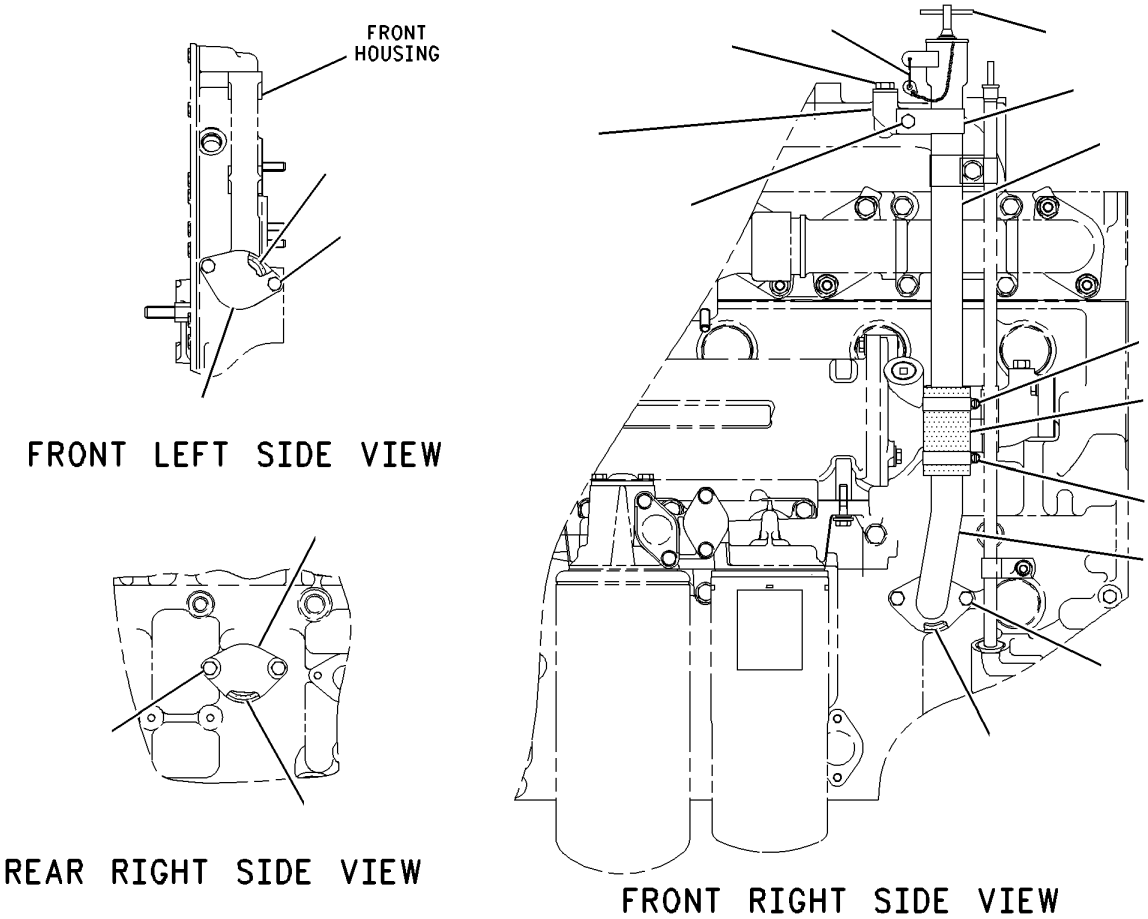

Ref.	Part number	Description	Qty.	Code	Group page
1	3F-6156	HOOK	1		
2	7C-1445	COVER	2		
3	163-9361	CAP AS-ENGINE OIL FILLER	1		
4	175-7356	TUBE AS	1	C	
5	061-9455	SEAL-O-RING	3		
6	138-2578	TUBE AS-OIL FILLER	1		
7	8T-4223	WASHER-HARD (13.5X25.5X3-MM THK)	2	C	
8	3E-4353	WASHER-HARD (11X25X3-MM THK)	1		
9	5P-6412	HOSE (8.89CM)		E	
10	8T-4244	NUT (M12X1.75-THD)	1	M	
11	6V-1820	BOLT (M10X1.5X30-MM)	1	M	
12	6V-3940	BOLT (M8X1.25X25-MM)	2	CM	
13	6V-5217	BOLT (M8X1.25X20-MM)	4	CM	
14	5N-2840	CLIP	1		
15	7C-5714	BRACKET	1		

Open this diagram on K-Part

133-7003 FILLER GP-ENGINE OIL (continued)

Ref.	Part number	Description	Qty.	Code	Group page
16	9M-1974	WASHER-HARD (8.8X16X2-MM THK)	6	C	
17	9M-2904	CLAMP-HOSE	2		
18	8T-4139	BOLT (M12X1.75X30-MM)	1	M	

CAT codes: C, E, M.

MANUALS-KOMATSU.COM

Complete Caterpillar PDF Parts Catalogue

2SW-SEBP7105

$99

Buy on this catalogue page in our store.

Download instructions are sent after payment confirmation.

Buy complete PDF - $99

Open this catalogue on K-Part