CATERPILLAR 621

2DB / SEBP5598

Contents

Section	Page
Lubrication system	2
Cooling system	
Air inlet and exhaust	
Fuel system	
Electrical and electronics	
Basic engine	
Basic engine	
Power train	

Open this catalogue on K-Part

9Y-4872 BASE GP-OIL FILTER -ENGINE

9Y-4872 BASE GP-OIL FILTER -ENGINE PART OF 110-9159 FILTER GP-ENGINE OIL

Drawing 1 of 1

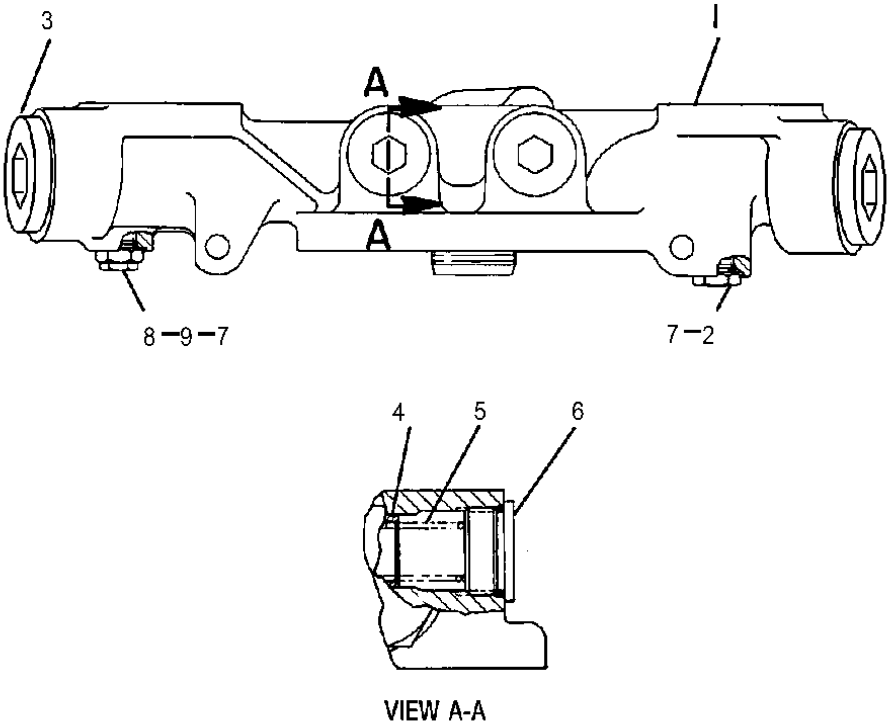

Ref.	Part number	Description	Qty.	Code	Group page
1	7C-5601	BASE AS-OIL FILTER	1		
2	9S-4191	PLUG (9/16-18-THD)	1		
3	5P-7684	PLUG	2		
	6K-6307	SEAL-O-RING	2		
4	1P-1367	PLUNGER (RELIEF VALVE)	2		
5	4N-8150	SPRING	2		
6	9S-9334	PLUG-O-RING	2		
	7M-8485	SEAL-O-RING	2		
7	3J-1907	SEAL-O-RING	2		
8	5P-3501	ADAPTER	1		
9	5M-6213	PLUG-PIPE (1/4-18-THD)	1		

2N-8220 BREATHER GP -CRANKCASE

2N-8220 BREATHER GP -CRANKCASE FOR USE WITH FUMES DISPOSAL GROUPS

Drawing 1 of 1

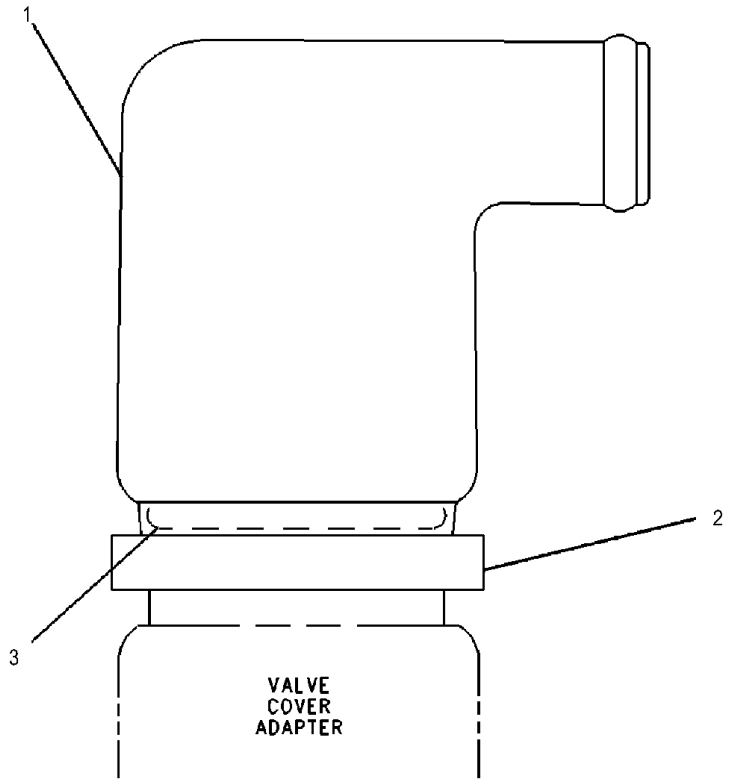

Ref.	Part number	Description	Qty.	Code	Group page
1	9Y-2988	BREATHER AS (CRANKCASE)	1	C	
2	2N-8109	CLAMP	1		
3	6V-3831	SEAL-O-RING	1		

CAT codes: C.

9Y-2989 BREATHER GP

9Y-2989 BREATHER GP PART OF 309-7001 ENGINE AR FOR USE WITH OPEN FUMES DISPOSAL

Drawing 1 of 1

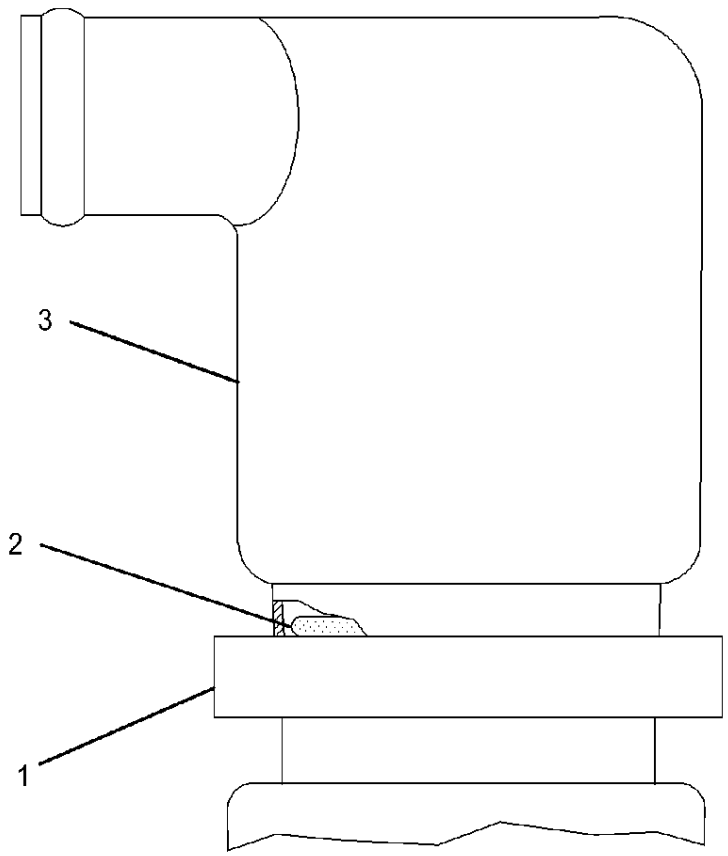

Ref.	Part number	Description	Qty.	Code	Group page
1	2N-8109	CLAMP	1		
2	6V-3831	SEAL-O-RING	1		
3	4N-4668	BREATHER AS (CRANKCASE)	1		

4N-2481 FASTENER GP-OIL PUMP MOUNTING -ENGINE

4N-2481 FASTENER GP-OIL PUMP MOUNTING -ENGINE PART OF 309-7001 ENGINE AR

Drawing 1 of 1

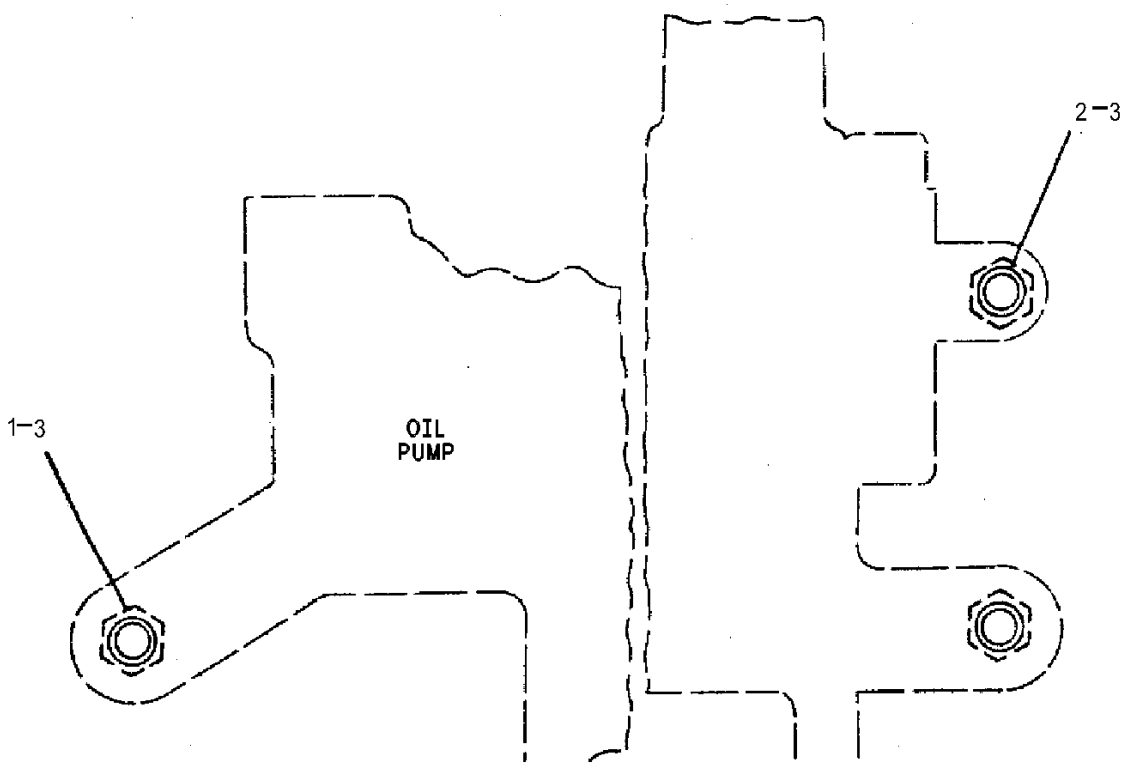

Ref.	Part number	Description	Qty.	Code	Group page
1	0L-1143	BOLT (3/8-16X2.5-IN)	2		
2	0S-1590	BOLT (3/8-16X2-IN)	1		
3	5M-2894	WASHER-HARD (10.2X18.5X2.5-MM THK)	3		

4N-8121 FILLER GP-ENGINE OIL

4N-8121 FILLER GP-ENGINE OIL PART OF 309-7001 ENGINE AR

Drawing 1 of 1

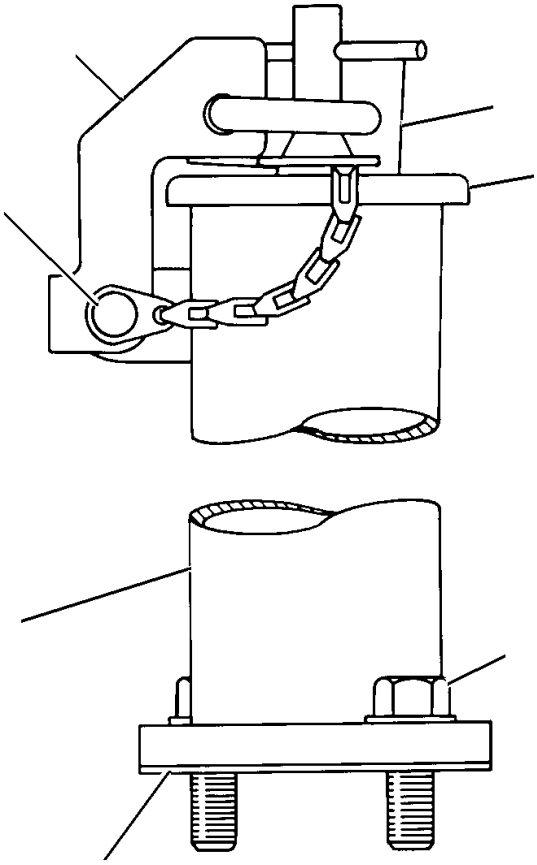

Ref.	Part number	Description	Qty.	Code	Group page
1	8M-0438	PADLOCK	1		
2	0S-1594	BOLT (3/8-16X1-IN)	2	C	
3	4N-0790	GASKET	1		
4	4N-8125	TUBE AS-FILLER	1		
	4N-2734	TUBE AS-FILLER	1		
5	8S-4212	RIVET	1		
6	2P-2717	HASP	1		
7	6N-2985	CAP AS-FILLER	1	C	
8	5M-2894	WASHER-HARD (10.2X18.5X2.5-MM THK)	2	C	

CAT codes: C.

110-9159 FILTER GP-ENGINE OIL

110-9159 FILTER GP-ENGINE OIL PART OF 4N-8733 LINES GP-ENGINE OIL

Drawing 1 of 1

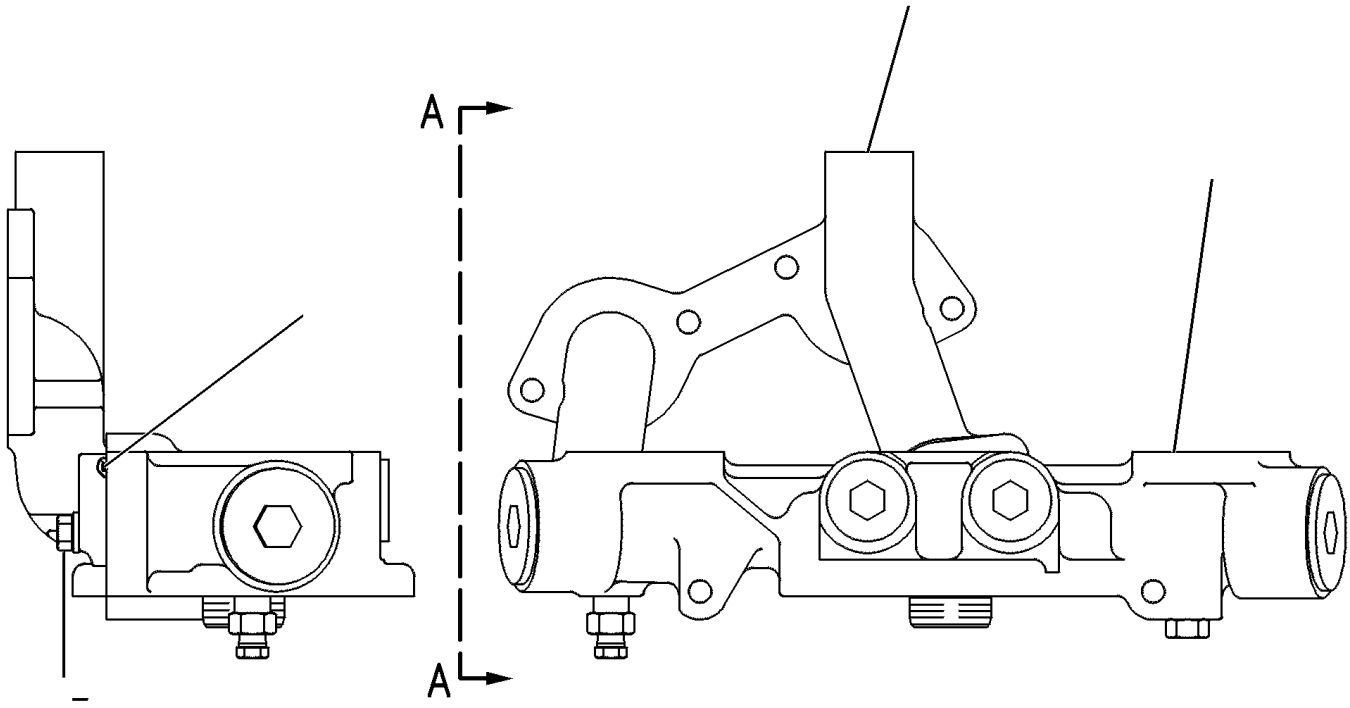

VIEW A-A

Ref.	Part number	Description	Qty.	Code	Group page
1	9Y-4872	BASE GP-OIL FILTER	1	Y	
2	7C-5602	ELBOW	1		
3	6V-5391	SEAL-O-RING	2		
4	0S-1588	BOLT (3/8-16X1.25-IN)	4		
5	5M-2894	WASHER-HARD (10.2X18.5X2.5-MM THK)	4		

CAT codes: Y.

4N-2738 FUMES DISPOSAL GP

4N-2738 FUMES DISPOSAL GP PART OF 309-7001 ENGINE AR

Drawing 1 of 1

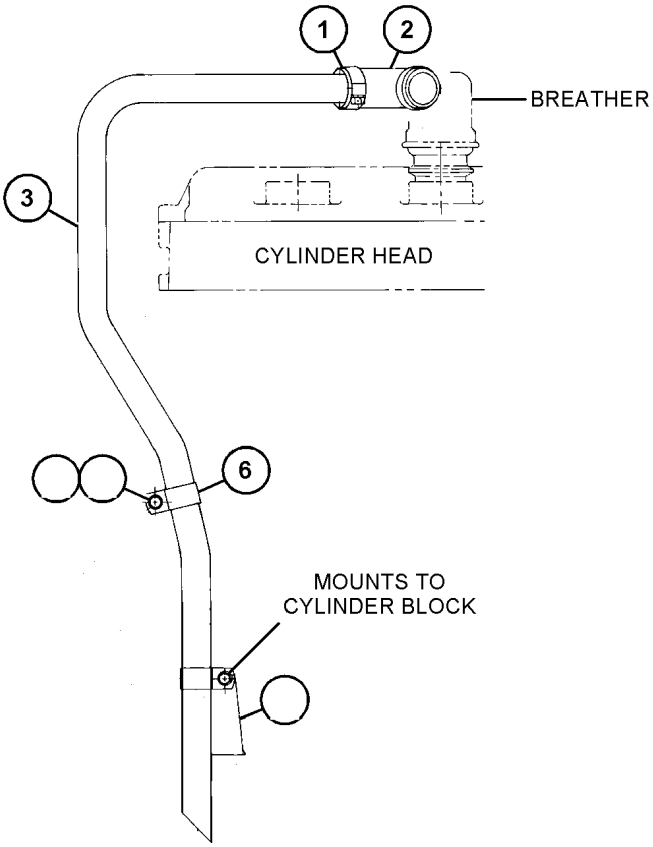

LEFT SIDE VIEW OF ENGINE

Ref.	Part number	Description	Qty.	Code	Group page
1	9M-2904	CLAMP-HOSE	2		
2	4N-5962	HOSE (FUMES DISPOSAL)	1		
3	6N-1252	TUBE	1		
4	0S-0509	BOLT (3/8-16X0.75-IN)	1		
5	5M-2894	WASHER-HARD (10.2X18.5X2.5-MM THK)	1		
6	2S-2053	CLIP	2		
7	4N-5264	BRACKET AS	1		
	1F-0750	NUT-WELD (3/8-16-THD)	1		

4N-8812 GUIDE GP-OIL LEVEL GAUGE

4N-8812 GUIDE GP-OIL LEVEL GAUGE PART OF 309-7001 ENGINE AR

Drawing 1 of 1

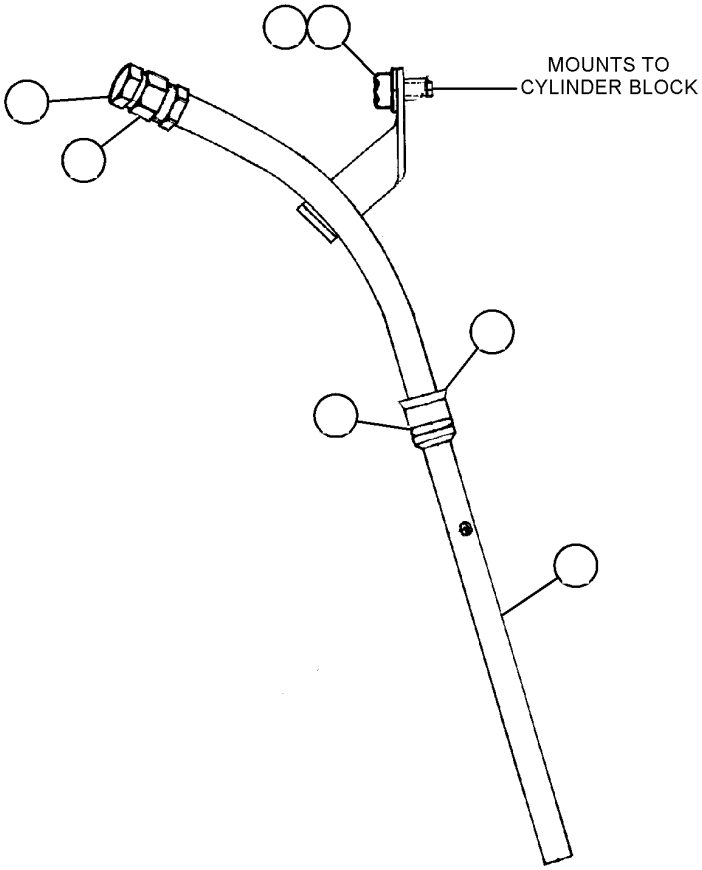

FRONT VIEW OF ENGINE

Ref.	Part number	Description	Qty.	Code	Group page
1	4N-9140	GUIDE AS	1		
	4N-1294	ADAPTER	1		
2	8M-5260	SEAL-O-RING	1		
3	0S-0509	BOLT (3/8-16X0.75-IN)	1		
4	5M-2894	WASHER-HARD (10.2X18.5X2.5-MM THK)	1		
5	6K-8077	UNION-FLARED	1		
6	5P-1184	PLUG	1		
7	165-6170	PLUG	3		

4N-8733 LINES GP-ENGINE OIL

4N-8733 LINES GP-ENGINE OIL PART OF 309-7001 ENGINE AR

Drawing 1 of 1

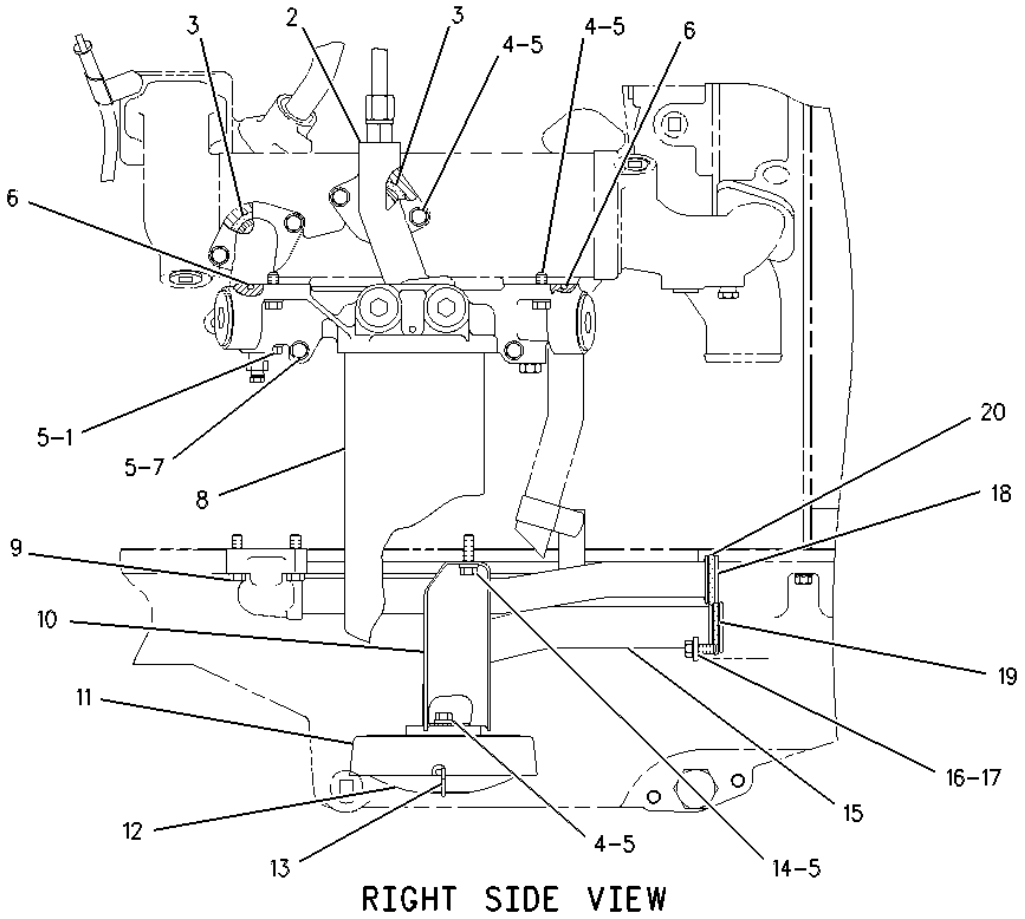

Ref.	Part number	Description	Qty.	Code	Group page
1	0S-1619	BOLT (3/8-16X3-IN)	2		
2	110-9159	FILTER GP-ENGINE OIL	1	Y	
3	109-0073	SEAL-O-RING	2		
4	1A-2029	BOLT (3/8-16X1.125-IN)	8	C	
5	5M-2894	WASHER-HARD (10.2X18.5X2.5-MM THK)	14		
6	3P-0650	SEAL-O-RING	2	C	
7	0S-1608	BOLT (3/8-16X3.75-IN)	2		
8	1R-0716	FILTER AS-ENGINE OIL (STANDARD EFFICIENCY)	1		
9	0S-1591	BOLT (3/8-16X1.5-IN)	2	C	
10	6N-7249	SUPPORT-SUCTION BELL	1		
11	8N-2104	BELL AS-SUCTION	1		
	1F-0750	NUT-WELD (3/8-16-THD)	2		
12	4N-0913	SCREEN-STRAINER	1		
13	4N-0914	CLIP	1		
14	0S-0509	BOLT (3/8-16X0.75-IN)	2		

MANUALS-KOMATSU.COM

Complete Caterpillar PDF Parts Catalogue

2DB-SEBP5598

$99

Buy on this catalogue page in our store.

Download instructions are sent after payment confirmation.

Buy complete PDF - $99

Open this catalogue on K-Part