CATERPILLAR D4H

2AC / SEBP2369

Contents

Section	Page
Power train	2

Open this catalogue on K-Part

MOUNTING GP

Mounting Gp

Drawing 1 of 3

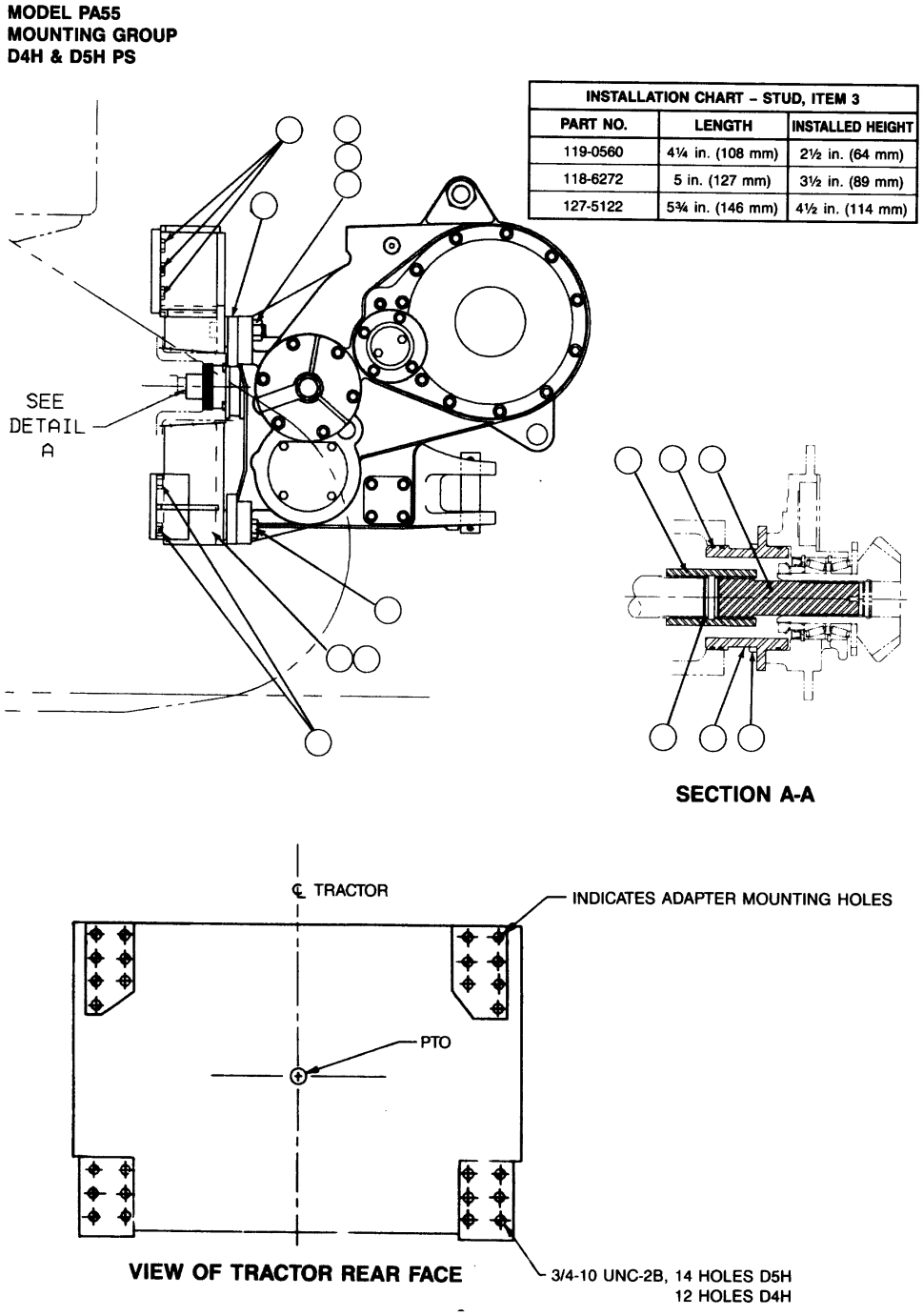

INSTALLATION CHART – STUD, ITEM 3		
PART NO.	LENGTH	INSTALLED HEIGHT
119-0560	4¼ in. (108 mm)	2½ in. (64 mm)
118-6272	5 in. (127 mm)	3½ in. (89 mm)
127-5122	5¾ in. (146 mm)	4½ in. (114 mm)

MOUNTING GP (continued)

Drawing 2 of 3

INSTRUCTIONS

1. Apply Loctite 271 to threads of studs, item 3, and install into winch adapter brackets, items 4 and 5, to the height shown in the chart on page 2.
2. PTO rotation is counterclockwise (CCW) as viewed from rear of tractor.

   Remove and discard tractor PTO cover.
3. Remove paint, rust, dirt and grease from mounting surfaces of tractor, winch and winch adapters.
4. Coat splines of PTO shaft, Item 15, with multi-purpose grease and install into bevel pinion gear of winch.
5. Install retaining rings, Item 14, in coupling, Item 11. Place coupling over PTO shaft with beveled end away from winch.
6. Install o-rings, Item 9, onto PTO pilot Item 7. Note: As the same PTO pilot may be used on several adaptions, usually only one o-ring groove will engage and seal in the tractor PTO opening.
7. Remove winch top cover to gain access to the bevel gears.

⚠ WARNING

Winch and adapters weigh approximately 2,500 lb (1,135 kg). Make certain that lifting equipment has adequate capacity. Failure to use adequate lifting equipment may result in property damage, personal injury or death.

8. Coat PTO pilot o-rings and splines of tractor PTO with multi-purpose grease and install winch on tractor while moving winch bevel gears to align the splines.
9. Apply Loc-tite 242 to threads of studs, Item 3 and capscrews, Items 1, 12 & 13 and tighten as follows:

   A) Nuts to be snugged up to approximately 100 lb•ft (136 N•m) then mark position of nut and tighten an additional 2½ flats.

   B) Capscrews, Item 1, to be tightened to 640 lb•ft (868 N•m) torque.

   C) Capscrews, Items 12 & 13 to be tightened to 265 lb•ft (359 N•m).

⚠ CAUTION

Fill winch to proper level with recommended oil BEFORE starting tractor. Winch bearing and gear damage may result if tractor is run without oil in winch.

MOUNTING GP (continued)

Drawing 3 of 3

ITEM	PART NO.	DESCRIPTION	QTY.		
			D4H DD	D4H SERIES II	D4H SERIES III D5H SERIES II
1	7X-0404	CAPSCREW, HEX HEAD (1 – 8 × 2½ G8)	—	4	—
	7X-0408	CAPSCREW, HEX HEAD (1 – 8 × 3½ G8)	—	—	4
	8C-8843	CAPSCREW, HEX HEAD (1 – 8 × 4½ G8)	4	—	—
2	7X-0450	NUT (1⅛ – 7)	4	4	4
3	119-0560	STUD (1⅛ – 7 × 4¼ G8)	—	4	—
	118-6272	STUD (1⅛ – 7 × 5 G8)	—	—	4
	127-5122	STUD (1⅛ – 7 × 5¾ G8)	4	—	—
4	123-4428	ADAPTER – RH	1	1	1
5	123-4429	ADAPTER – LH	1	1	1
6	118-6553	SPACER	8	—	4
7	118-6537	PILOT, PTO	1	1	1
8	123-4407	CAPSCREW, HEX HEAD (½ – 13 × 1 G5)	4	4	4
9	8S-5654	O-RING	3	3	3
10	119-1551	WASHER (1⅛ HARDENED)	4	4	4
11	118-6539	COUPLING	1	1	1
12	8T-9398	CAPSCREW, HEX HEAD (¾ – 10 × 1¾ G8)	4	4	4
13	7X-0366	CAPSCREW, HEX HEAD (¾ – 10 × 2 G8)	10	10	10
14	120-7671	RETAINING RING	2	2	2
15	118-6559	PTO SHAFT	1	1	1

Kit, p/n 118-6553, contains 4 each of 8C-8843, 127-5122, and 118-6553 for converting a PA55 from the D4H Series III or D5H Series II to a D4H-DD. If converting to a D4H-DD from a D4H Series II, order kit p/n 118-6553 plus 4 additional spacers 118-6553.

Ref.	Part number	Description	Qty.	Code	Group page

Parts list rows are not synced on this VPS for SEBP2369/SEBP23690001 yet.

CONTROL GP

Control Gp

Drawing 1 of 6

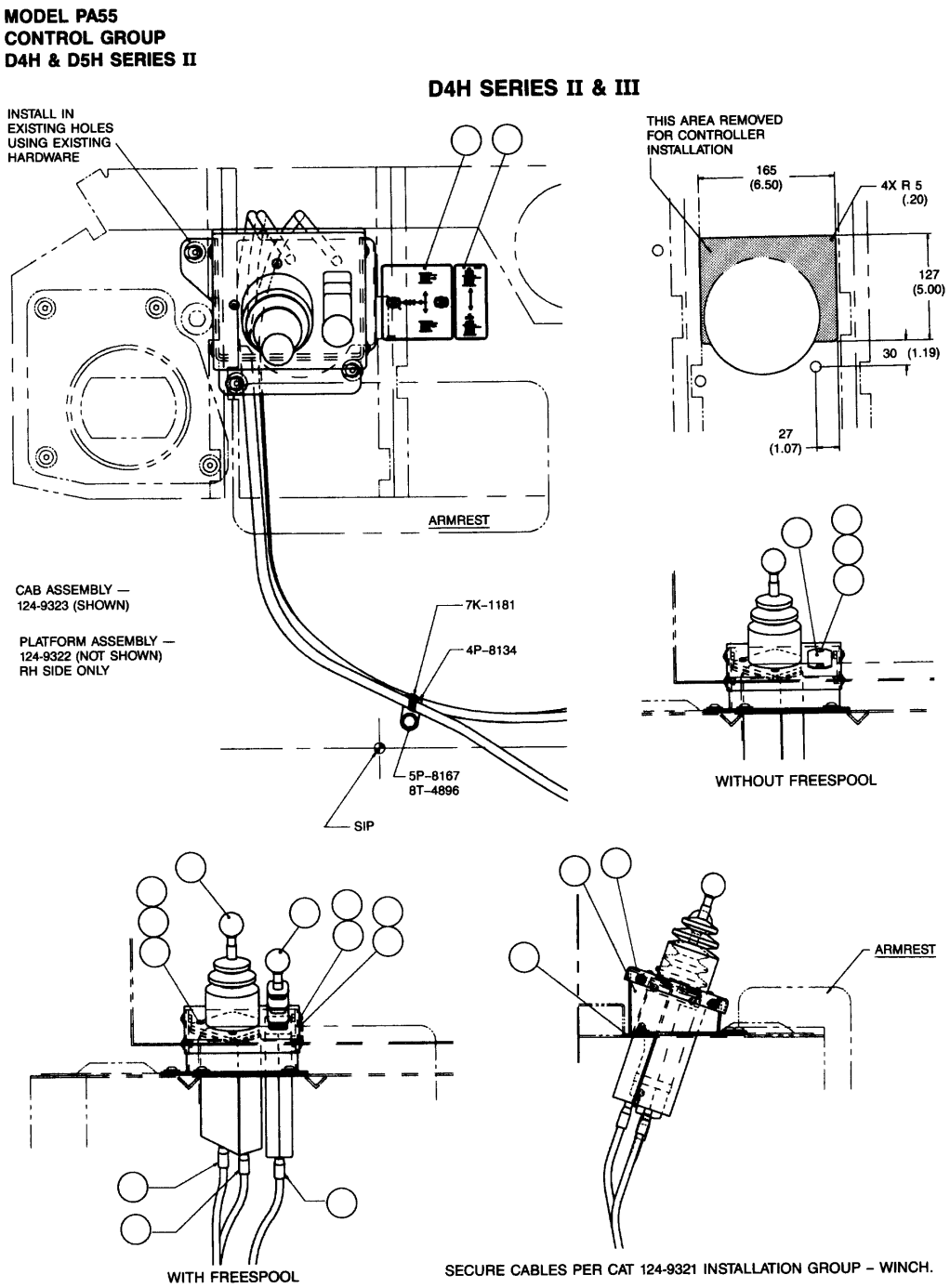

CONTROL GP (continued)

Drawing 2 of 6

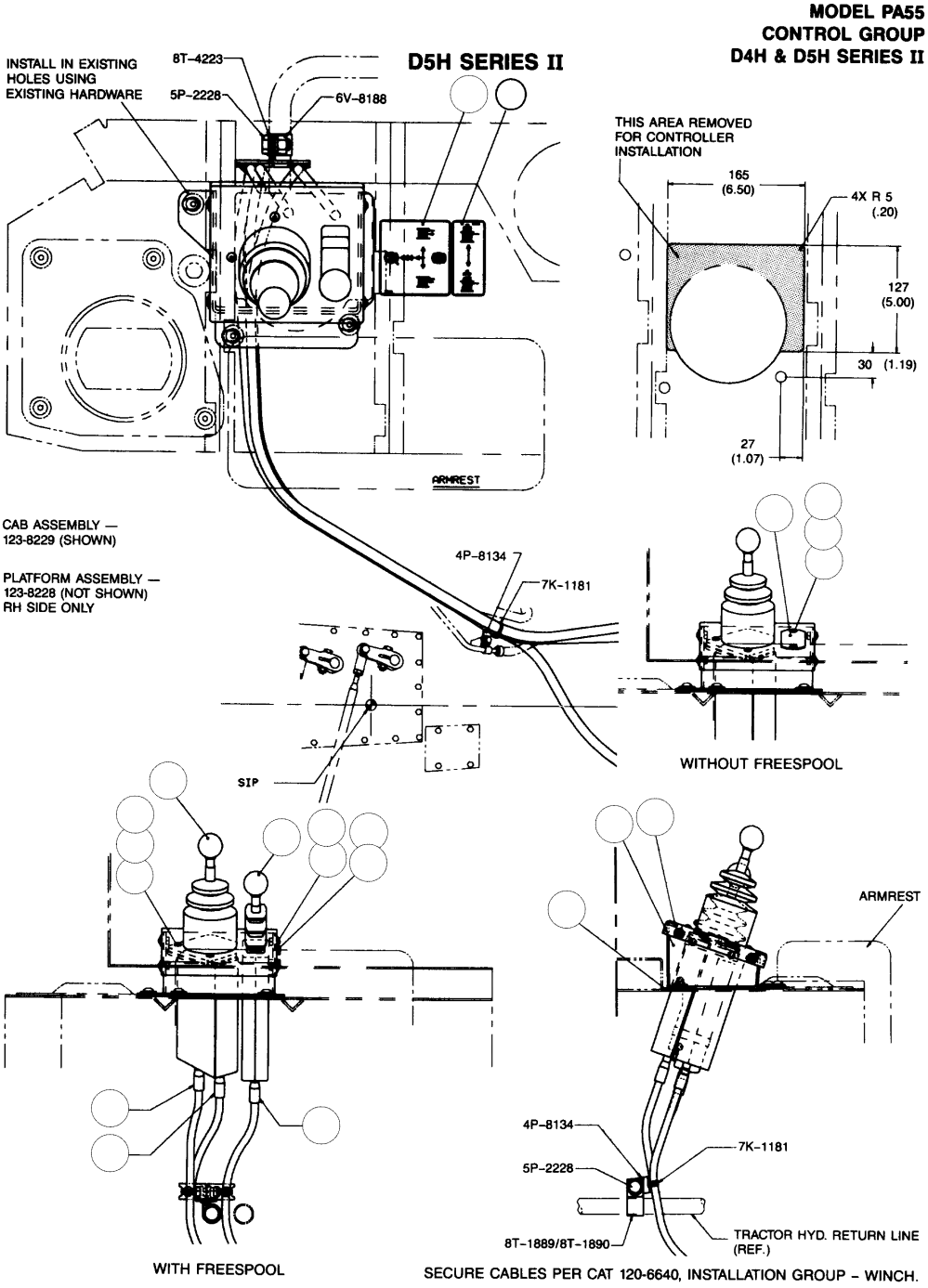

Open this diagram on K-Part

CONTROL GP (continued)

Drawing 3 of 6

CONTROL INSTALLATION INSTRUCTION

Note: These instructions are provided as a general guide. Tractor options, application requirements or local regulations may require deviation from these recommendations.

1. Modify the right hand console cover by removing the shaded area as shown.
2. Install the gasket, item 10, to the bottom of the control bracket, item 3.
3. Install the control bracket onto the right hand console using existing button head capscrews.
4. Carefully route control cables from winch to underside of right hand console.

⚠ CAUTION

Avoid routing cables near moving shafts or linkage which may cause damage to cables or restrict free movement of tractor components.

5. Route the control cables up through the opening of the control bracket and install cables into controllers as follows:

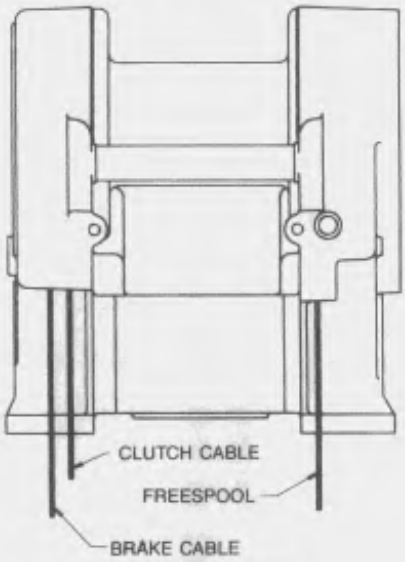

TOP VIEW OF WINCH

Power Shift Control – Dual Axis

1. Remove the six through-bolts, item 34, from the control stand and separate the two cable support housings, items 37 & 38. From each plunger, remove the sliding lock screw and threaded bushing, items 35 & 36.
2. Install the sliding lock screw, item 35, onto the control cables. Apply two drops of Loctite 242 to the cable threads and install the threaded bushing, item 36, onto the cable core until the end of the cable core is level with the end of the bushing.
3. Hold the controller in your left hand with the knob end up and the mounting bolts located at 6, 9 and 12 o'clock positions. Mark the plunger closest to the 6-o'clock position as the "clutch" control. Mark the plunger closest to the 12 o'clock position as the "brake" control. The "clipped" corner of the control will be installed toward the rear of the tractor.
4. Install the brake cable to the "brake" control plunger and the clutch cable into "clutch" control plunger. Move the control lever to extend the plungers far enough to expose the wrench flats. With a wrench, hold the plunger as you tighten the sliding lock screw to 50 lb•ft (68 N•m) torque. Photo 1

⚠ CAUTION

Tightening the sliding lock screw without holding the plunger with a wrench will result in damage to the control assembly.

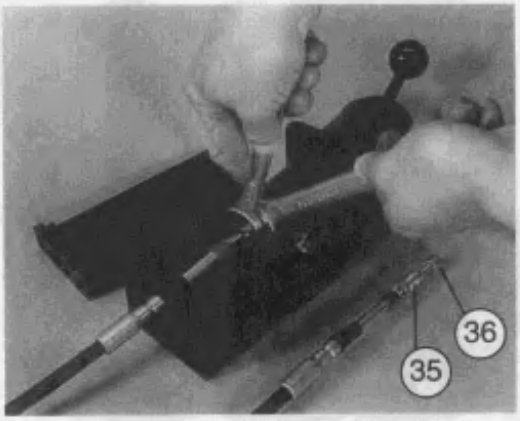

5. Install the cable support housings, items 37 & 38, onto the controller. Place the groove of the control cable housings into the saddle of the cable anchors, items 39 & 40. Install the six through-bolts, washers, lockwashers and nuts, items 31, 33, 34 & 41. Evenly tighten the bolts to 85 lb•in. (10 N•m) torque.

Open this diagram on K-Part

CONTROL GP (continued)

Drawing 4 of 6

6. Insert the controller/cables sub-assembly from the bottom into the opening of the control bracket cover, item 11, and secure with three button, socket-head capscrews, lockwashers and nuts, items 4, 5 & 6. If the winch is equipped with freespool, install the freespool controller/cable sub-assembly at this time. If not equipped with freespool, install the control bracket cover/controllers sub-assembly onto the control bracket using four button, socket-head capscrews and washers, items 4 and 12.

Freespool Control Lever

1. Remove the knob, item 32, and the four oval head machine screws and lockwashers, items 16 & 17, from the long lever housing cover and remove the cover.
2. Prepare the control cable for installation by installing the o-ring, item 18, over the control lever end of the cable. The control lever end is identified by the u-bolt groove in the cable housing.
3. Install one nut, item 19, onto the cable core followed by the lockwasher, item 31.
4. Install the clevis, item 21, and one more nut, item 19, onto the cable. The cable core end must extend beyond the nut by 7/32 in. (5.5 mm). Tighten the first nut to secure the clevis in this position.
5. Slip the clevis over the bellcrank of the lever and install the clevis pin, item 22, and secure in place with cotter pin, item 23. Photo 2

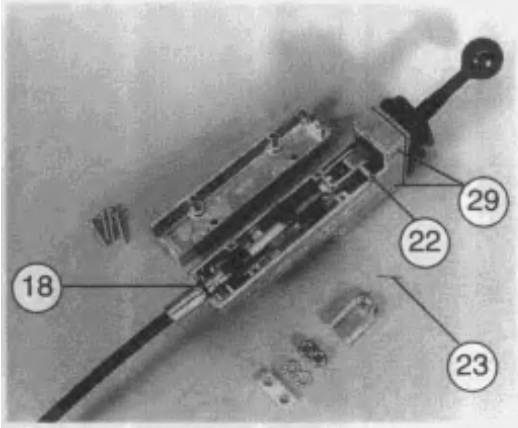

6. Remove the u-bolt, item 24, from the housing.
7. Position the o-ring, item 18, on the control cable housing so that when the cable is lowered into place, the o-ring fits in the groove in the housing.
8. Install the u-bolt, item 24, over the cable and through the housing. Install the spacer, item 25, over the u-bolt followed by the lockwashers and nuts, items 20 & 26. Tighten the u-bolt nuts to 90 lb•in. (10 N•m) torque.
9. Install the cover onto the housing with the four oval head machine screws and lockwashers, items 16 & 17.
10. Remove the two through-bolts and nuts, items 29 and 19, from the top two mounting holes of the lever housing.
11. Secure the lever to the control bracket with capscrews, lockwashers and nuts, items 5, 6 and 7. The long cover of the lever housing must face toward the operator.
12. Install the control bracket cover/controller sub-assembly onto the control bracket base using four button, socket-head capscrews and washers, items 4 and 12. Install the knob, item 32, onto the lever.

General Instructions

1. Install the control instruction self-adhesive decal(s), items 8 and 9, onto the console cover to the rear of the control bracket.
2. Fill winch to proper level with recommended oil. Refer to oil specifications found in the Operation and Preventive Maintenance Manual, publication SEBU 6884 (Paccar Winch PC-209).
3. Verify proper control cable and operating pressure adjustment by following the procedures found in the Operation and Preventive Maintenance Manual, publication SEBU 6884 (Paccar Winch PC-209) or the service manual, publication SENR 5358 (Paccar Winch PC-210).

CONTROL GP (continued)

Drawing 5 of 6

MODEL PA55
CONTROL GROUP
D4H & D5H SERIES II

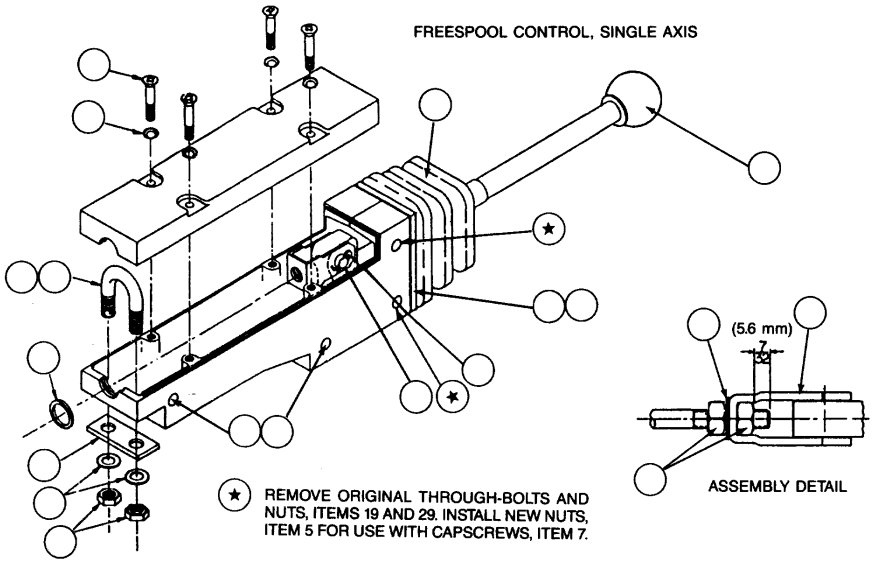

POWERSHIFT CONTROL, DUAL AXIS

TIGHTENING TORQUE: a) 85 lb•in. (10 N•m)
b) 20 lb•in. (2.5 N•m)

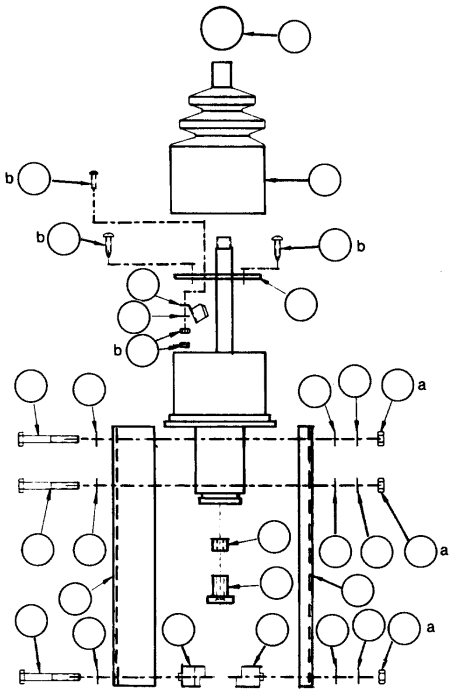

CONTROL GP (continued)

Drawing 6 of 6

ITEM	PART NO.	DESCRIPTION	QTY.	
			W/FREESPOOL	W/O FREESPOOL
1	123-4432	CONTROL, POWERSHIFT, DUAL-AXIS	1	1
2	123-4433	CONTROL, FREESPOOL, SINGLE AXIS	1	—
3	126-2830	CONTROL BRACKET BASE	1	1
4	123-4435	CAPSCREW, BUTTON SOCKET HEAD	7	9
5	123-4436	NUT (1/4-20)	5	5
6	123-4437	LOCKWASHER (1/4)	5	7
7	123-4438	CAPSCREW	2	—
8	123-4439	DECAL, POWERSHIFT CONTROL	1	1
9	123-4440	DECAL, FREESPOOL CONTROL	1	—
10	126-2831	GASKET	1	1
11	126-2827	CONTROL BRACKET COVER	1	1
12	8T-4205	WASHER (1/4)	4	4
13	126-2826	COVER	—	1
14	123-4425	CONTROL CABLE – CLUTCH & BRAKE – 84 in. (2134 mm)	2	2
15	123-4424	CONTROL CABLE – FREESPOOL – 90 in. (2286 mm)	1	—
16	126-5992	MACHINE SCREW, CSK, OVAL HEAD (8-32 × 1 1/4)	4	—
17	9F-5602	LOCKWASHER, CSK (8)	4	—
18	8F-9206	O-RING	1	—
19	9S-8748	NUT (1/4-28)	6	—
20	7H-3937	LOCKWASHER, EXTERNAL TOOTH (5/16)	2	—
21	126-2799	CLEVIS	1	—
22	126-2800	CLEVIS PIN	1	—
23	3B-4604	COTTER PIN (1/16 × 1/2)	1	—
24	126-2798	U-BOLT	1	—
25	126-2801	U-BOLT SPACER	1	—
26	6V-8186	NUT (5/16-24)	2	—
27	126-5990	MACHINE SCREW, CSK, OVAL HEAD (8-32 × 1/2)	4	—
28	126-2825	BOOT, FREESPOOL LEVER	1	—
29	126-5991	MACHINE SCREW, FLSTR HEAD (1/4-28 × 1 7/16)	4	—
30	126-2802	BOOT RETAINER PLATE	1	—
31	1H-3338	LOCKWASHER, EXTERNAL TOOTH (1/4)	7	6
32	7R-5874	KNOB	2	1
33	6V-8185	NUT (1/4-20)	6	6
34	8T-9367	CAPSCREW, HEX HEAD (1/4-20 × 2 G5)	6	6
35	126-2821	SLIDING LOCKSCREW	2	2
36	126-2822	CABLE BUSHING	2	2
37	126-2823	CABLE SUPPORT HOUSING, OUTER	1	1
38	126-2824	CABLE SUPPORT HOUSING, INNER	1	1
39	126-2818	CABLE ANCHOR, OUTER	1	1
40	126-2820	CABLE ANCHOR, INNER	1	1
41	8T-4205	WASHER, FLAT-THIN (1/4)	12	12
42	126-2806	RESTRICTOR PLATE	1	1
43	126-2805	BRAKE-OFF DETENT CLIP SPRING	1	1
44	126-2804	BOOT	1	1
45	126-5995	MACHINE SCREW, RD HEAD (4-40 × 5/8)	2	2
46	6B-4540	NUT (4-40)	2	2
47	126-5994	SCREW, SELF TAPPING (10-9 × 3/4)	4	4
48	126-5993	LOCKWASHER, EXTERNAL TOOTH (4)	2	2
49	128-2803	CABLE CLAMP	1	—

Ref.	Part number	Description	Qty.	Code	Group page
Parts list rows are not synced on this VPS for SEBP2369/SEBP23690002 yet.					

MANUALS-KOMATSU.COM

Complete Caterpillar PDF Parts Catalogue

2AC-SEBP2369

$99

Buy on this catalogue page in our store.

Download instructions are sent after payment confirmation.

Buy complete PDF - $99

Open this catalogue on K-Part